DEFENDER

BULL BAR

VPLPF0448

WARNING

- Accessories which are not correctly installed can be dangerous. Read the instructions carefully prior to installation. Comply with instructions at all times. If in doubt, contact your Jaguar Land Rover Dealer.

E281960

Reference	Part Number
Bull Bar Kit	VPLPF0448
Sensor Parking Sensors	LR118984
Camera Bracket	VPLPF0447

NOTE

- Fixing [X] is not used in the kit.

E280925

Black Parking Sensors [LR118984]

NOTE

- Black parking sensors LR118984 are required to be ordered for installation.

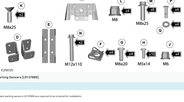

E279984

Camera Bracket [VPLPF0447]

NOTE

- Only under-bracket is supplied with front proximity camera.

E277728

Fitting Instructions

1. NOTE
   - A jaw type mounting (VPLPF0446 / VPLPF0448) must be installed first before the bull bar can be installed.

   Install the bull bar mounting kit
   For additional information, please refer to the official Workshop Manual: Bull Bar Mounting [W2182-1E]

2.

   E280897

   Install the front inner sparking sensor electrical connectors.

   - Fixing [A] sensor electrical connectors.
   - If installed, install the front proximity camera electrical connector.

3. 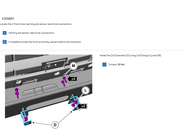

   E281004

   - Install the [C] screws (M12 x 110 mm) [C].
   - Torque: 50 Nm.

4. The vehicle equipped with a front proximity camera adapter step is fitted in Fig. T1. These steps are not required for vehicles without a front proximity camera.

5. 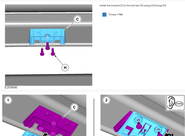

   E277728

   - Install the bracket [T1] to the bull bar [A] using [T2] fixings [C].
   - Torque: 7 Nm.

6.

   E280898

   Install the [C] screws (M8 x 25 mm) [C].

   - Install the camera bracket [T3] to the fixing bracket [C].
   - Install [T2] fixings [T1].
   - Torque: 7 Nm.

7. NOTE
   - The step is not required for vehicles with a installed front license plate.

8. 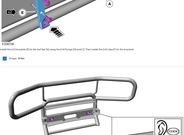

   E280900

   Install the [C] screws (M12 x 110 mm) [C]. Then install the [A] [B] [D] [E] fixings [D] and [E]. Then install the [A] [B] [D] [E] fixings [D] and [E].

   - Torque: 50 Nm.

9. 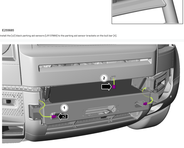

   E280898

   Install the [C] front parking sensor [C] (VPLPF0447) the parking sensor brackets to the bull bar [A].

10.

    E280897

    Attach the [A] front inner sparking sensor electrical connectors and the front inner sensor [B] to the bull bar. Ensure the sensor is fully seated.

    - Fixing [A] sensor electrical connectors.
    - If installed, check the location of the front proximity camera electrical connector.

11. WARNING
    - Make sure the parking sensor harnesses does not get trapped. The harnesses must not be crushed against the sensor face.

    NOTE
    - The step requires the aid of another technician.

    E280901

    Install the [A] [B] [C] [D] [E] fixings [D] and [E] fixings [D] and [E]. Then install the [A] [B] [C] [D] [E] fixings [D] and [E].

    - Torque: 50 Nm.

12. NOTE
    - The step requires the aid of another technician.

    E280907

    Install the front bar [A] to the bull bar mounting crades using [C] fixings [B].

    - Torque: 110 Nm.

13. WARNING
    - Take care when handling the front proximity camera. Avoid touching the camera lens.

    NOTE
    - For vehicles with a front proximity camera order [VPLMX0401].
    - Make sure the proximity camera is in the correct orientation when installing into the housing.

    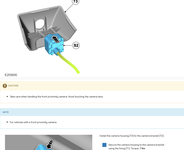

    E280905

    Carefully install the front proximity camera [D] into the camera housing [T3].

14. WARNING
    - Take care when handling the front proximity camera. Avoid touching the camera lens.

    NOTE
    - For vehicles with a front proximity camera.

    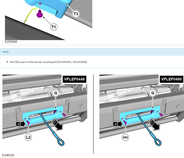

    E277728

    Install the camera housing [T3] to the camera bracket [T1].

    - Secure the the camera housing to the camera bracket using the fixings [T2]. Torque: 7 Nm.

15. Fix [T1] [T2] as part of the bull bar mounting kit [VPLPF0446 / VPLPF0448].

    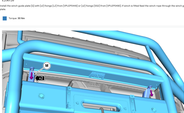

    E280728

    Install the crash guide plate [C] [D] [E] fixings [C] [D] [E] [F] [G] [H] [J] [K] [L] fixings [D] [E] [F] [G] [H] [J] [K] [L] [M] [N] [P] [R] [S]. If crash or S-Rear Rear Bar extra cover Cope through the stone guide plate.

    - Torque: 50 Nm.

16.

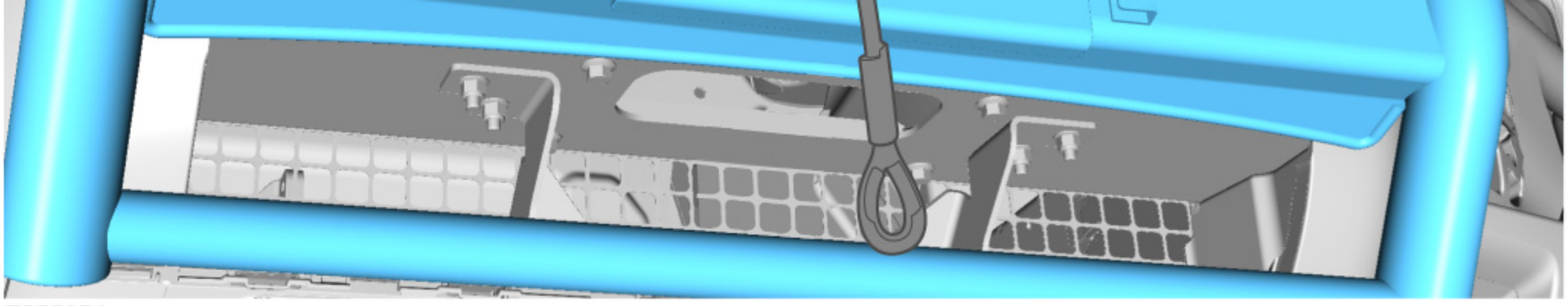

E255854

Install (x2) fixings (M).

Torque: **30 Nm**

16

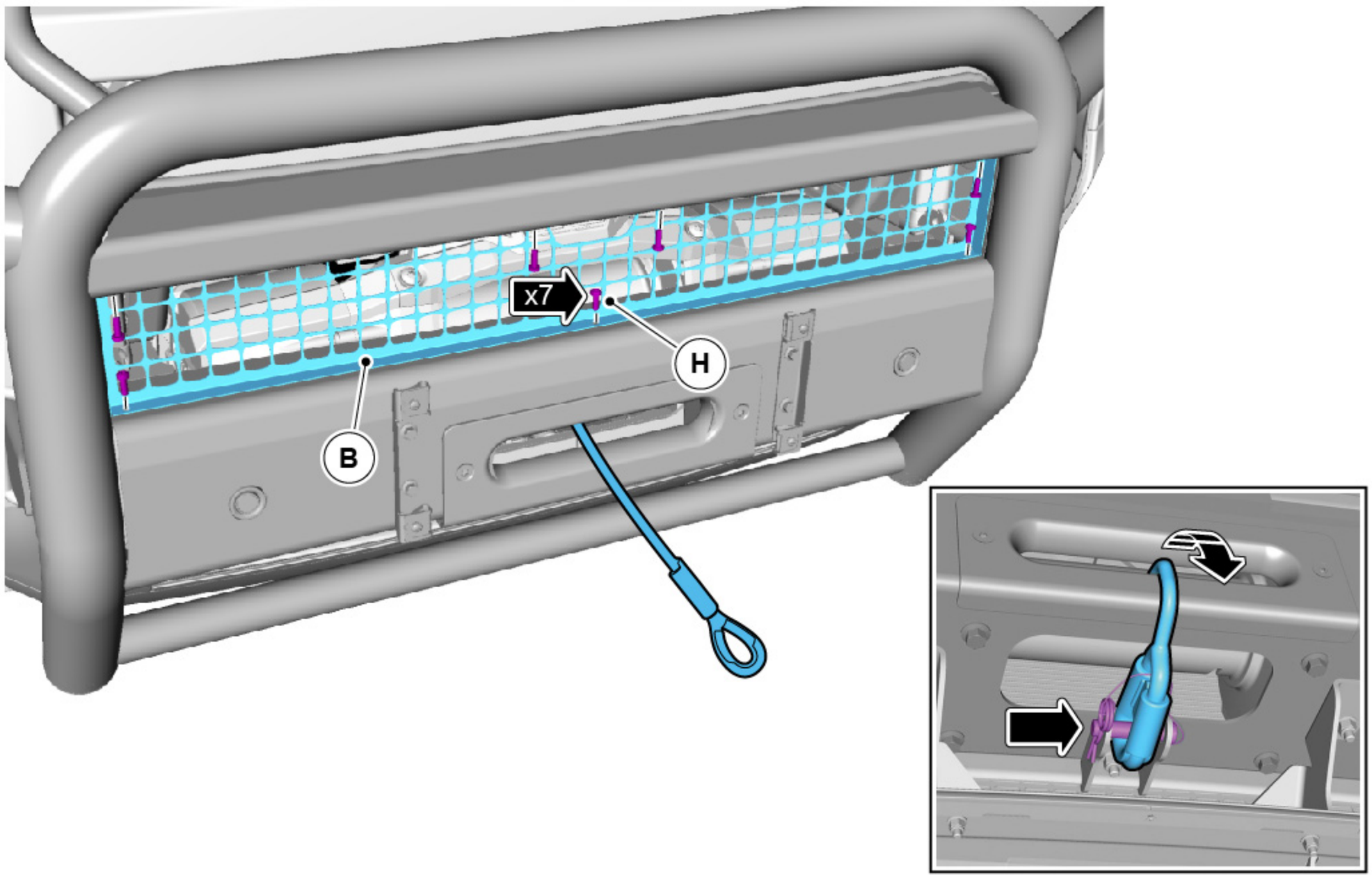

E256729

Install the grill (B) using (x7) fixings (H). If winch is fitted, attach the winch rope using the Pin and Clip (T) from Remote Electric Winch Kit VPLEP0426 to the bracket on the underside of the cradle making sure there is no slack in the rope.

Torque: **7 Nm**

17

NOTE

- It is required by law in some markets to rivet the license plate to the vehicle.

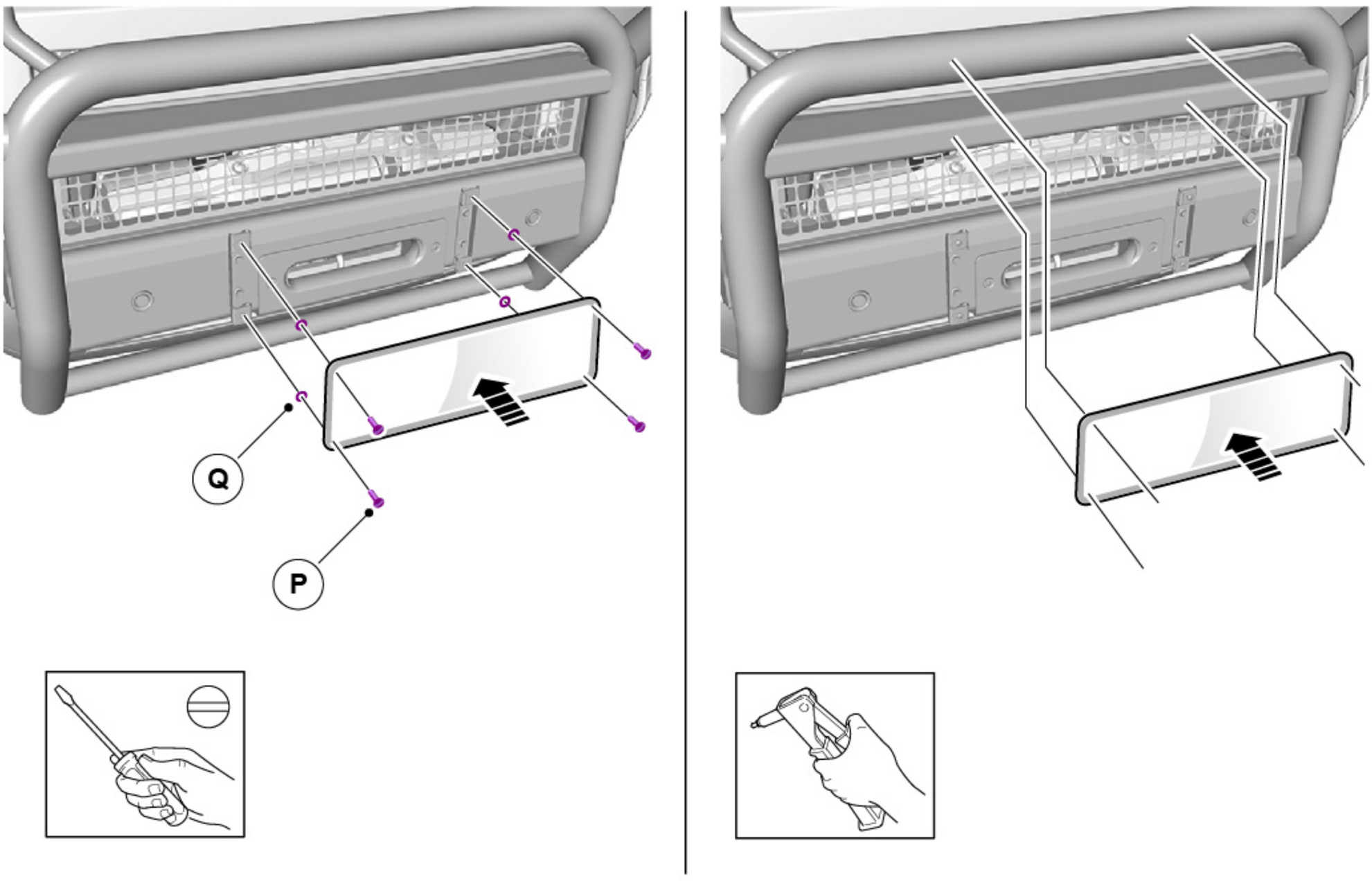

E273387

Install the license plate using the quarter turn screw and washer provided. Alternatively if the market requires, rivet the license plate in the position shown.

18

Check to confirm the parking sensors and front proximity camera are working correctly. Check that the camera image is displayed in the correct orientation on the touchscreen.

© Land Rover 2016