1994/1995 Discovery 1

14Cux Hotwire
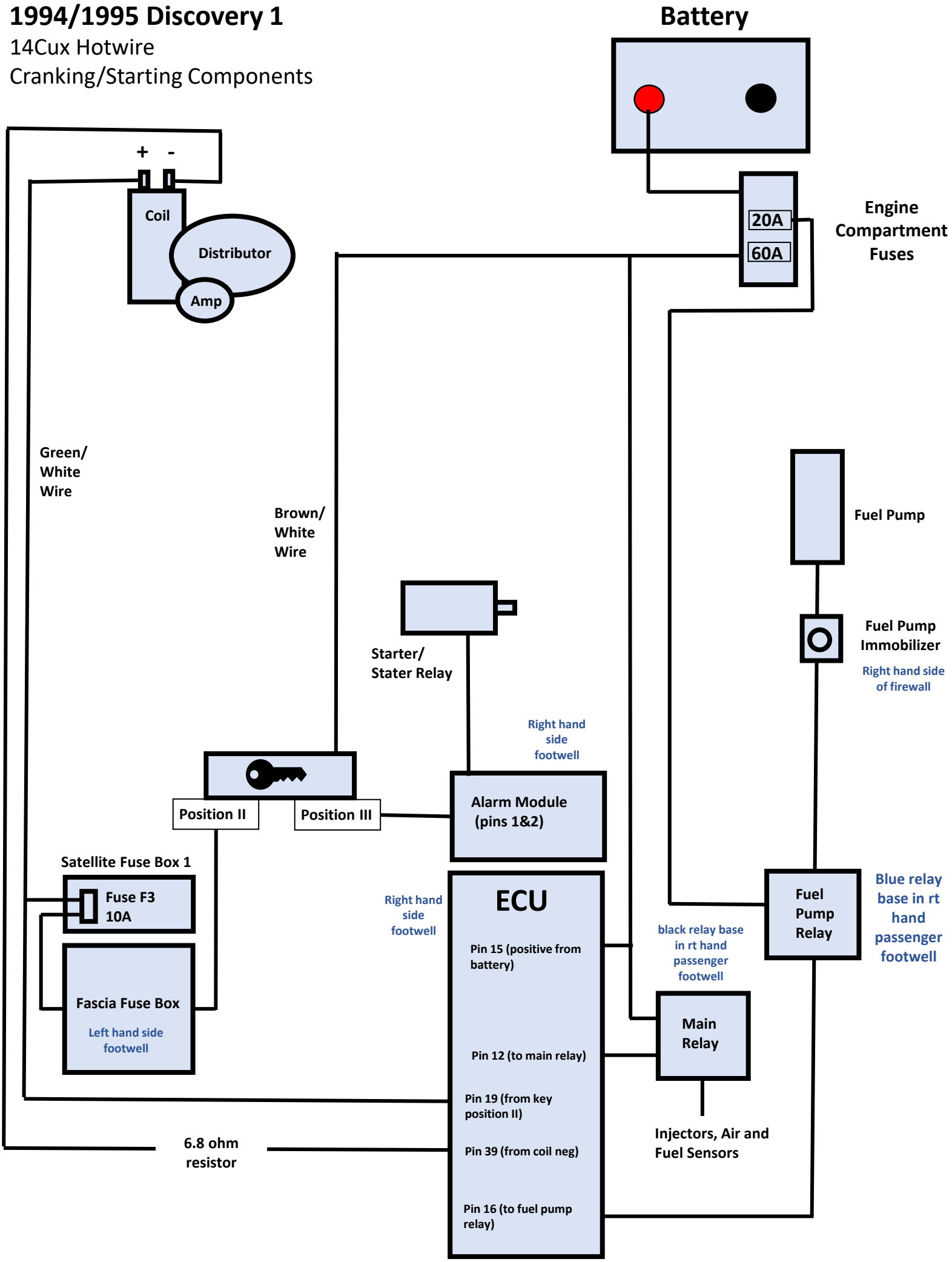
Cranking/Starting Components