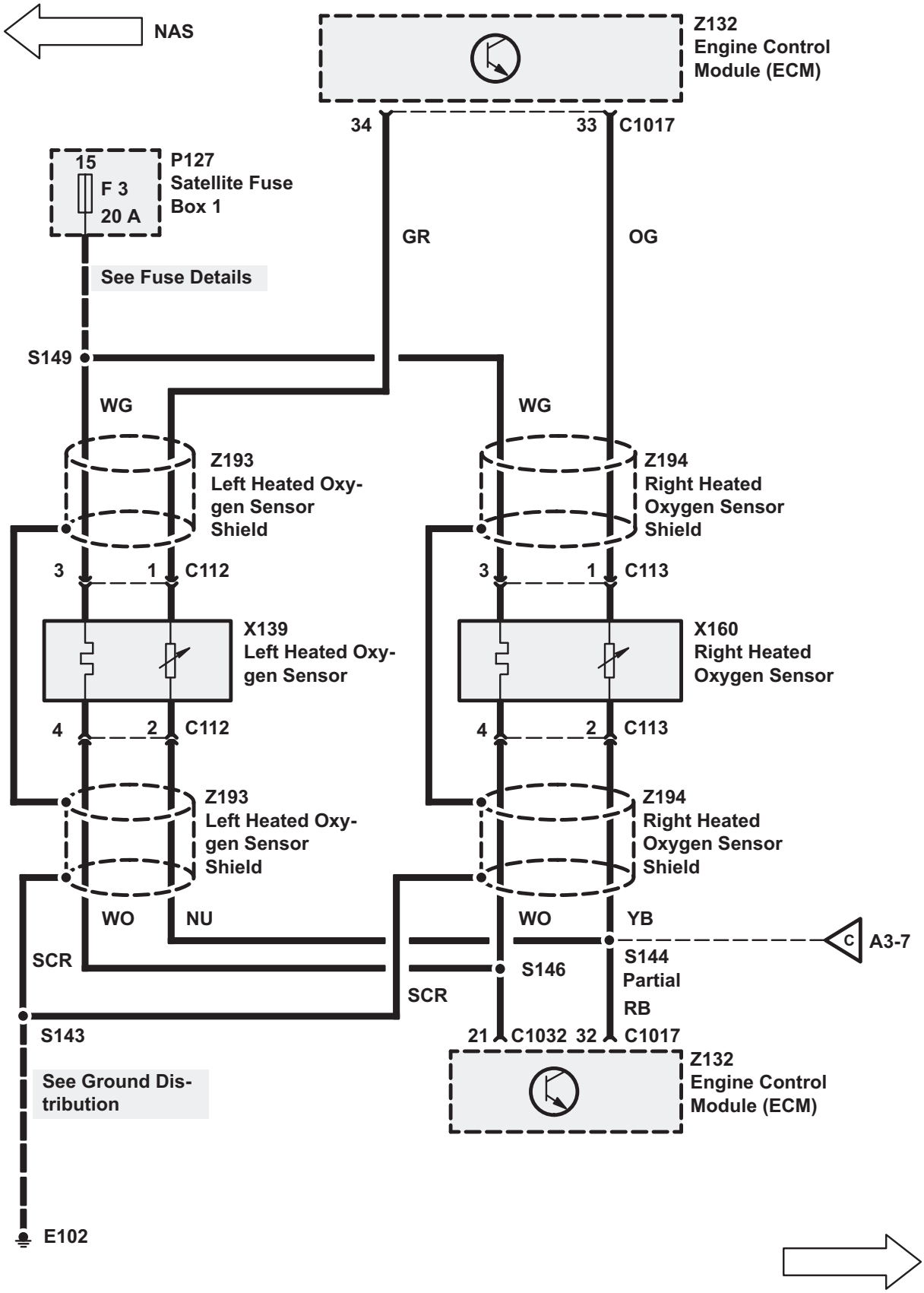
NAS
Z132
Engine Control
Module (ECM)
34
33
C1017
15
F 3
20 A
P127
Satellite Fuse
Box 1
See Fuse Details
GR
OG
S149
WG
WG
Z193
Left Heated Oxy-
gen Sensor
Shield
Z194
Right Heated
Oxygen Sensor
Shield
3
1
C112
3
1
C113
X139
Left Heated Oxy-
gen Sensor
X160
Right Heated
Oxygen Sensor
4
2
C112
4
2
C113
Z193
Left Heated Oxy-
gen Sensor
Shield
Z194
Right Heated
Oxygen Sensor
Shield
WO
NU
WO
YB
C
A3-7
SCR
S146
S144
Partial
SCR
RB
S143
21
C1032
32
C1017
See Ground Dis-
tribution
Z132
Engine Control
Module (ECM)
E102

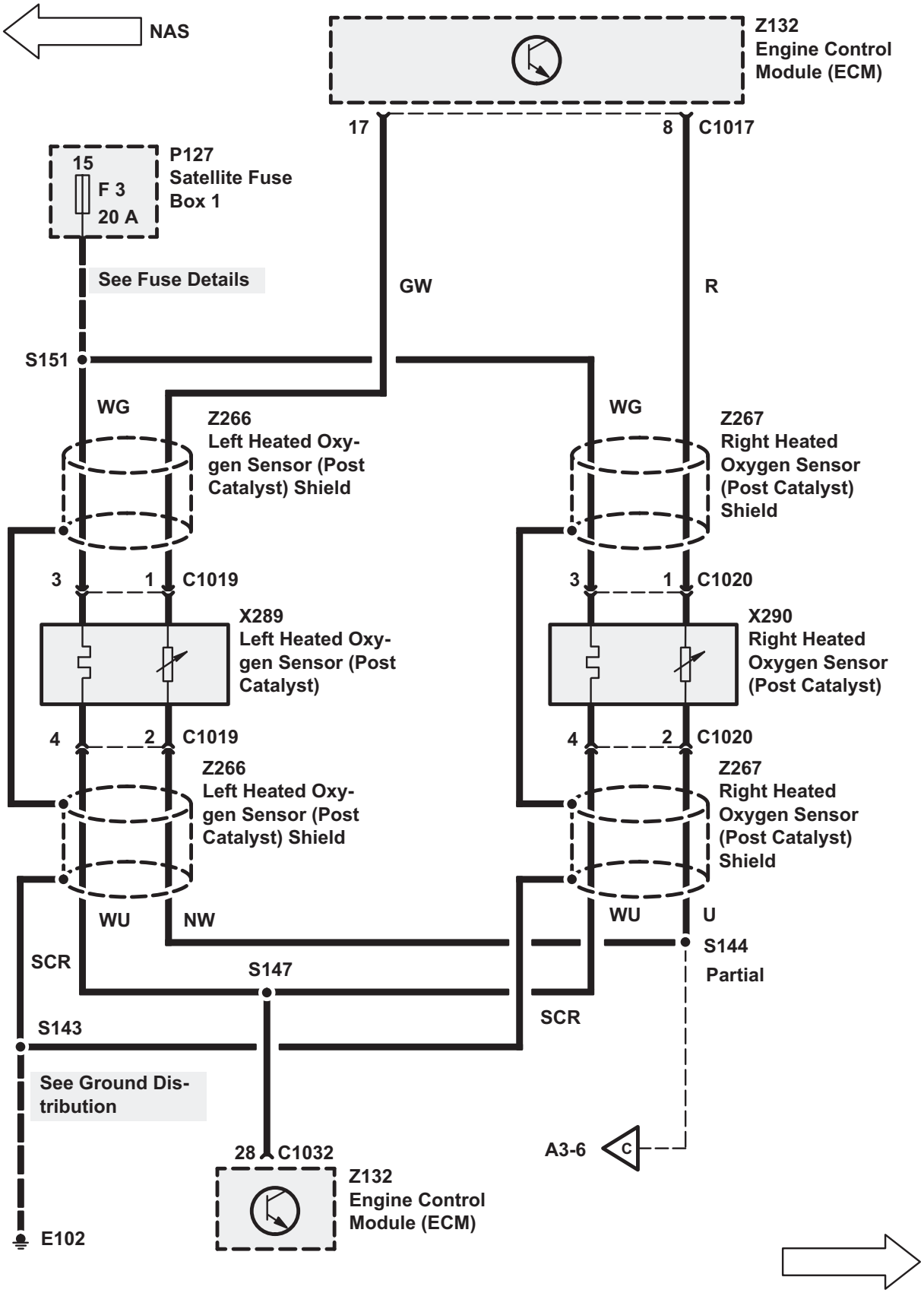
NAS
Z132
Engine Control
Module (ECM)
17
8
C1017
15
F 3
20 A
P127
Satellite Fuse
Box 1
See Fuse Details
GW
R
S151
WG
Z266
Left Heated Oxy-
gen Sensor (Post
Catalyst) Shield
WG
Z267
Right Heated
Oxygen Sensor
(Post Catalyst)
Shield
3
1
C1019
3
1
C1020
X289
Left Heated Oxy-
gen Sensor (Post
Catalyst)
X290
Right Heated
Oxygen Sensor
(Post Catalyst)
4
2
C1019
4
2
C1020
Z266
Left Heated Oxy-
gen Sensor (Post
Catalyst) Shield
Z267
Right Heated
Oxygen Sensor
(Post Catalyst)
Shield
WU
NW
WU
U
S144
Partial
SCR
S147
SCR
S143
See Ground Dis-
tribution
28
C1032
Z132
Engine Control
Module (ECM)
A3-6
C
E102