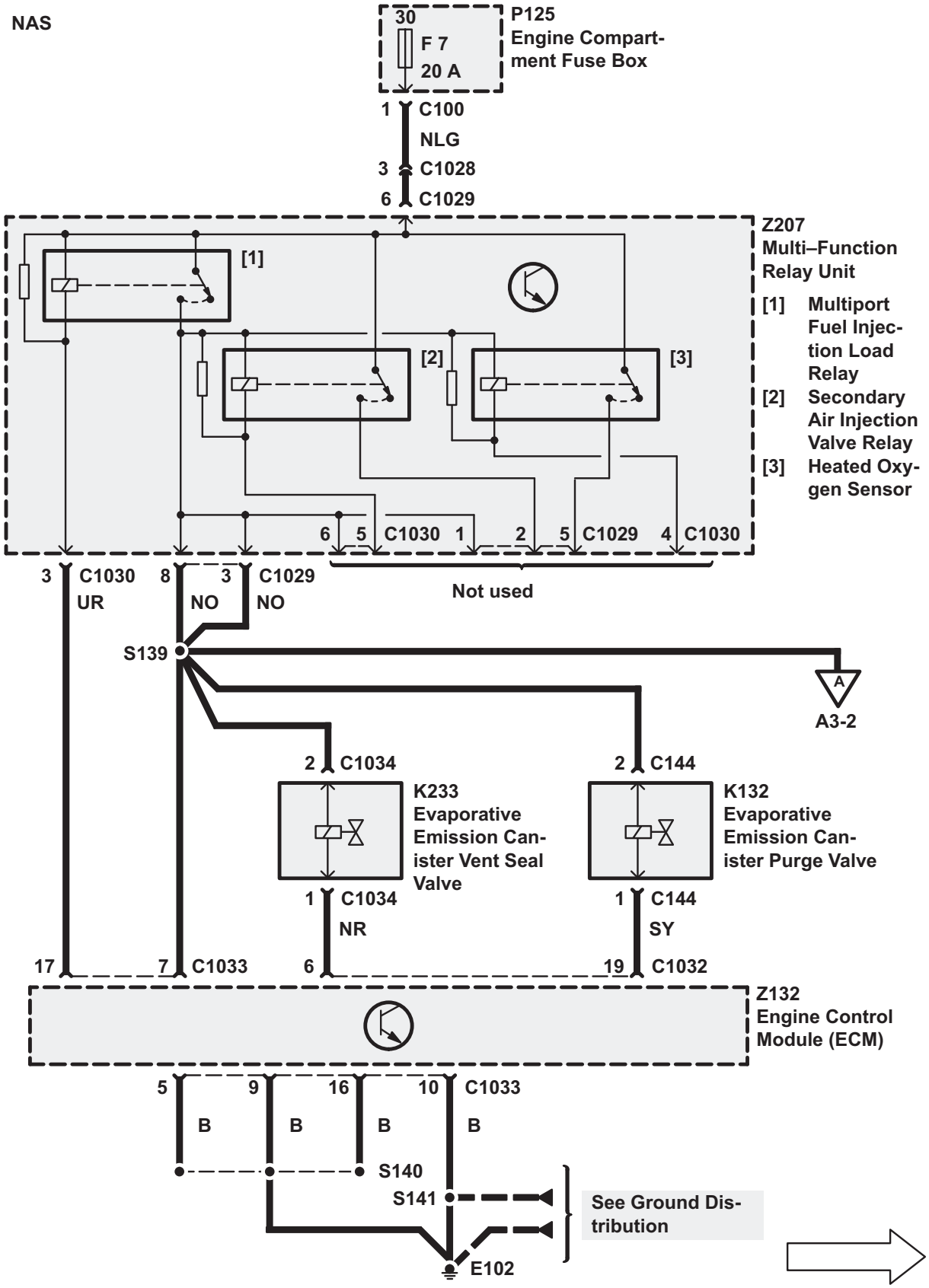
NAS
30
F 7
20 A
P125
Engine Compartment Fuse Box
1 C100
NLG
3 C1028
6 C1029
Z207
Multi–Function Relay Unit
[1] Multiport Fuel Injection Load Relay
[2] Secondary Air Injection Valve Relay
[3] Heated Oxygen Sensor
[1]
[2]
[3]
6 5 C1030 1 2 5 C1029 4 C1030
Not used
3 C1030
UR
8
NO
3 C1029
NO
S139
A
A3-2
2 C1034
K233
Evaporative Emission Canister Vent Seal Valve
1 C1034
NR
2 C144
K132
Evaporative Emission Canister Purge Valve
1 C144
SY
17
7 C1033
6
19 C1032
Z132
Engine Control Module (ECM)
5
9
16
10 C1033
B
B
B
B
S140
S141
E102
See Ground Distribution

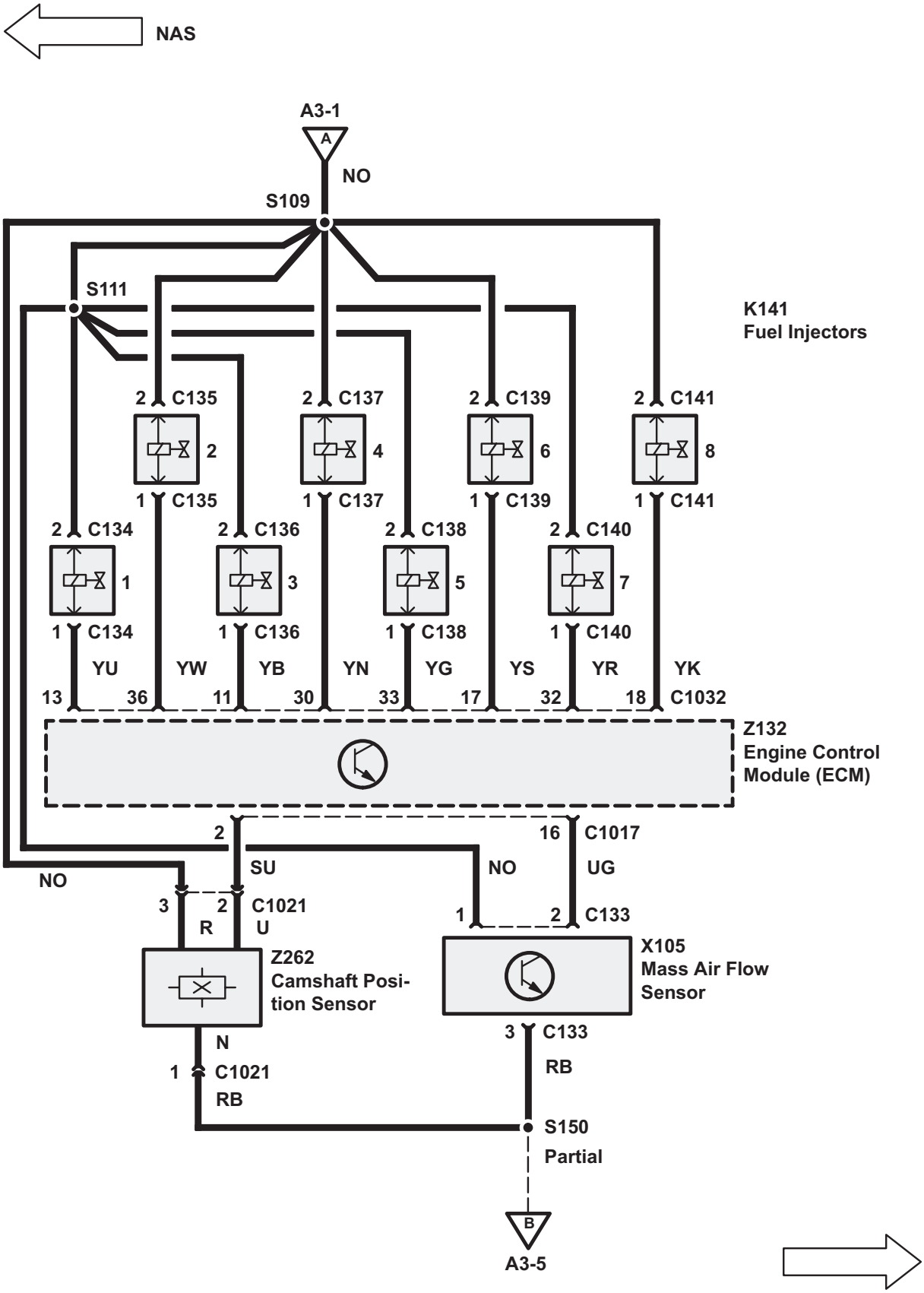
NAS
A3-1
A
NO
S109
S111
K141
Fuel Injectors
2 C135
2 C137
2 C139
2 C141
2
4
6
8
1 C135
1 C137
1 C139
1 C141
2 C134
2 C136
2 C138
2 C140
1
3
5
7
1 C134
1 C136
1 C138
1 C140
YU
YW
YB
YN
YG
YS
YR
YK
13
36
11
30
33
17
32
18
C1032
Z132
Engine Control
Module (ECM)
2
16 C1017
SU
NO
UG
NO
3
2 C1021
R
U
1
2 C133
Z262
Camshaft Posi-
tion Sensor
X105
Mass Air Flow
Sensor
N
3 C133
1 C1021
RB
RB
S150
Partial
B
A3-5

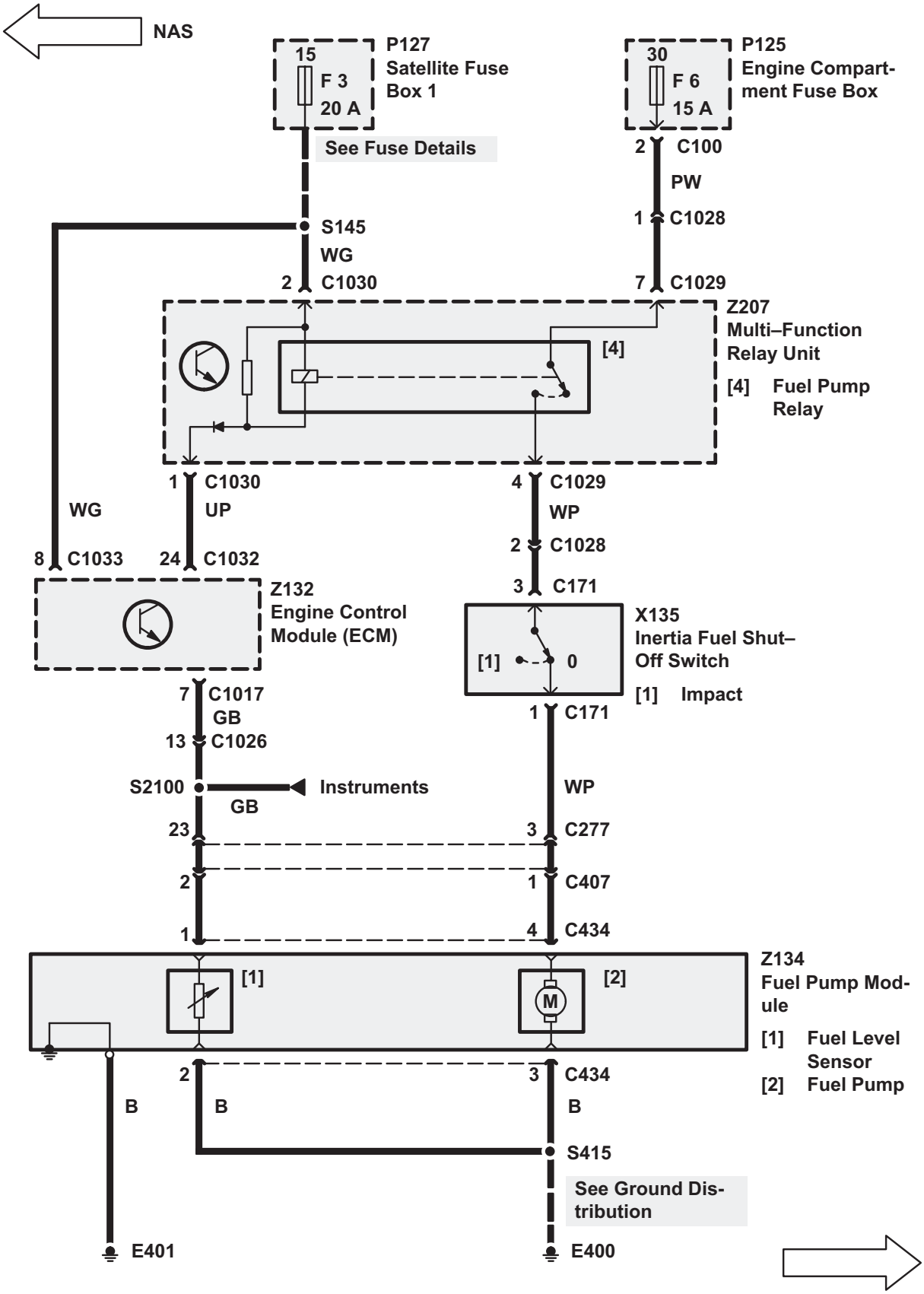
NAS
15
F 3
20 A
P127
Satellite Fuse
Box 1
See Fuse Details
30
F 6
15 A
P125
Engine Compart-
ment Fuse Box
2 C100
PW
1 C1028
S145
WG
2 C1030
7 C1029
Z207
Multi–Function
Relay Unit
[4]
[4] Fuel Pump
Relay
1 C1030
WG
UP
4 C1029
WP
2 C1028
8 C1033
24 C1032
3 C171
Z132
Engine Control
Module (ECM)
X135
Inertia Fuel Shut–
Off Switch
[1]
0
[1] Impact
7 C1017
GB
13 C1026
1 C171
S2100
Instruments
GB
WP
23
3 C277
2
1 C407
1
4 C434
Z134
Fuel Pump Mod-
ule
[1]
[2]
M
[1] Fuel Level
Sensor
[2] Fuel Pump
2
3 C434
B
B
B
S415
See Ground Dis-
tribution
E401
E400