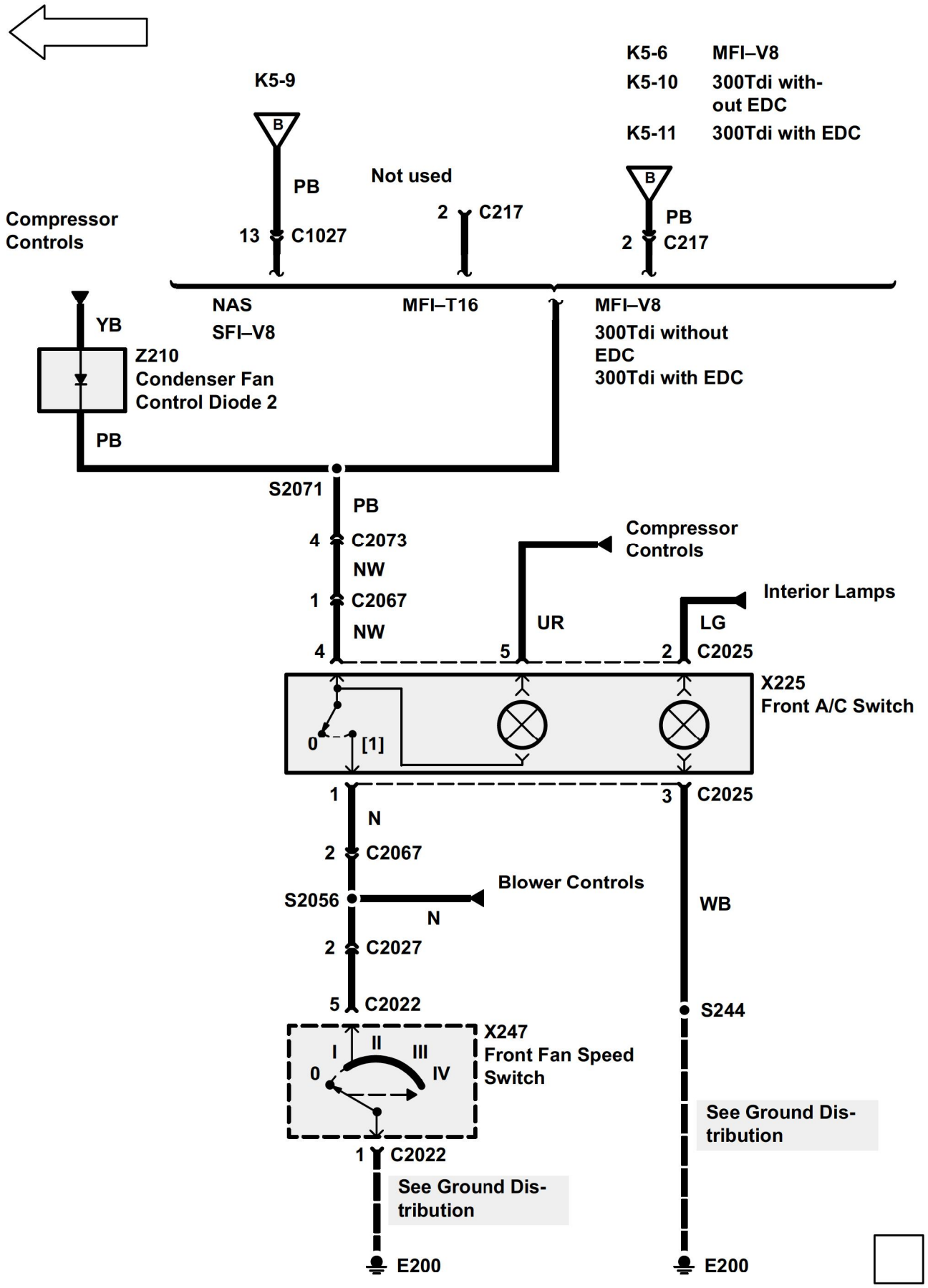

PDF Creator - PDF4Free v2.0 http://www.pdf4free.com