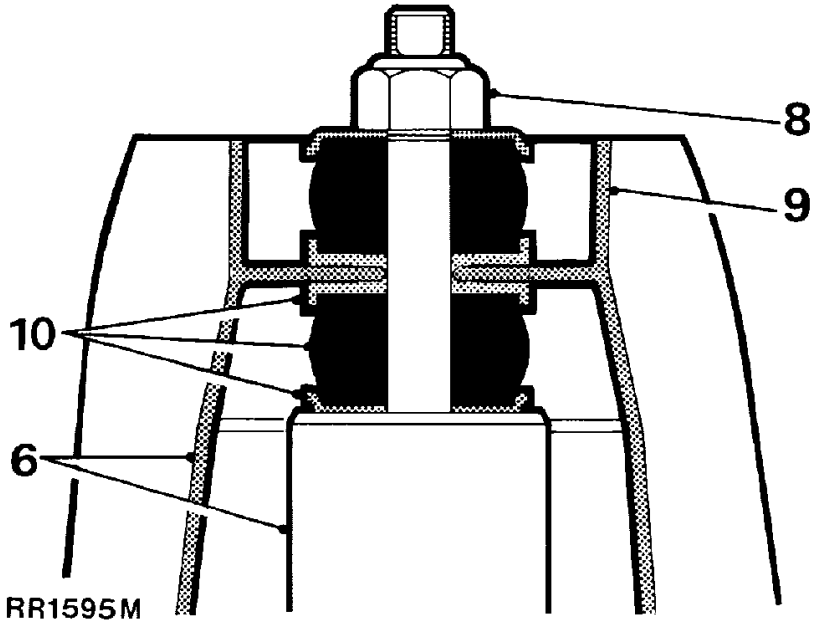
8
9
10
6
RR1595M