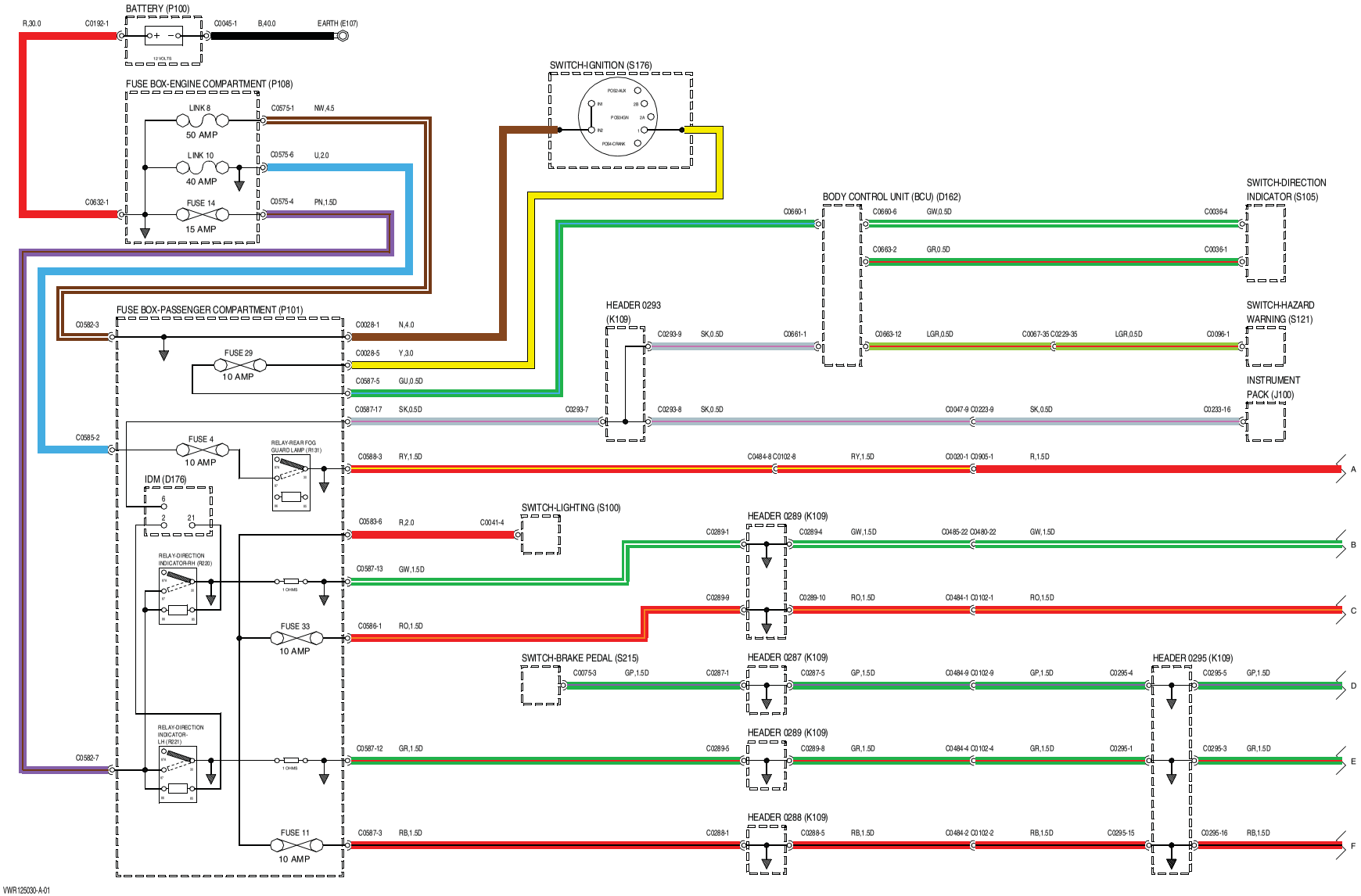
BATTERY (P100)
R,30.0
C0192-1
C0045-1
B,40.0
EARTH (E107)
12 VOLTS
FUSE BOX-ENGINE COMPARTMENT (P108)
LINK 8
50 AMP
C0575-1
NW,4.5
LINK 10
40 AMP
C0575-6
U,2.0
C0632-1
FUSE 14
15 AMP
C0575-4
PN,1.5D
SWITCH-IGNITION (S176)
POS2-AUX
R1
2B
P.OS3-IGN
2A
R2
1
POS4-CRANK
BODY CONTROL UNIT (BCU) (D162)
C0660-1
C0660-6
GW,0.5D
C0036-4
C0663-2
GR,0.5D
C0036-1
SWITCH-DIRECTION INDICATOR (S105)
FUSE BOX-PASSENGER COMPARTMENT (P101)
C0582-3
C0028-1
N,4.0
FUSE 29
10 AMP
C0028-5
Y,3.0
C0587-5
GU,0.5D
HEADER 0293 (K109)
C0293-9
SK,0.5D
C0661-1
C0663-12
LGR,0.5D
C0067-35
C0229-35
LGR,0.5D
C0096-1
SWITCH-HAZARD WARNING (S121)
C0587-17
SK,0.5D
C0293-7
C0293-8
SK,0.5D
C0047-9
C0223-9
SK,0.5D
C0233-16
INSTRUMENT PACK (J100)
C0585-2
FUSE 4
10 AMP
RELAY-REAR FOG GUARD LAMP (R131)
C0588-3
RY,1.5D
C0484-8
C0102-8
RY,1.5D
C0020-1
C0905-1
R,1.5D
A
IDM (D176)
6
2
21
C0583-6
R,2.0
C0041-4
SWITCH-LIGHTING (S100)
HEADER 0289 (K109)
C0289-1
C0289-4
GW,1.5D
C0485-22
C0480-22
GW,1.5D
B
RELAY-DIRECTION INDICATOR-RH (R220)
C0587-13
GW,1.5D
1 OHMS
C0289-9
C0289-10
RO,1.5D
C0484-1
C0102-1
RO,1.5D
C
FUSE 33
10 AMP
C0586-1
RO,1.5D
SWITCH-BRAKE PEDAL (S215)
C0075-3
GP,1.5D
C0287-1
HEADER 0287 (K109)
C0287-5
GP,1.5D
C0484-9
C0102-9
GP,1.5D
C0295-4
HEADER 0295 (K109)
C0295-5
GP,1.5D
D
RELAY-DIRECTION INDICATOR-LH (R221)
C0582-7
C0587-12
GR,1.5D
C0289-5
HEADER 0289 (K109)
C0289-8
GR,1.5D
C0484-4
C0102-4
GR,1.5D
C0295-1
C0295-3
GR,1.5D
E
FUSE 11
10 AMP
C0587-3
RB,1.5D
C0288-1
HEADER 0288 (K109)
C0288-5
RB,1.5D
C0484-2
C0102-2
RB,1.5D
C0295-15
C0295-16
RB,1.5D
F
VWR125030-A-01

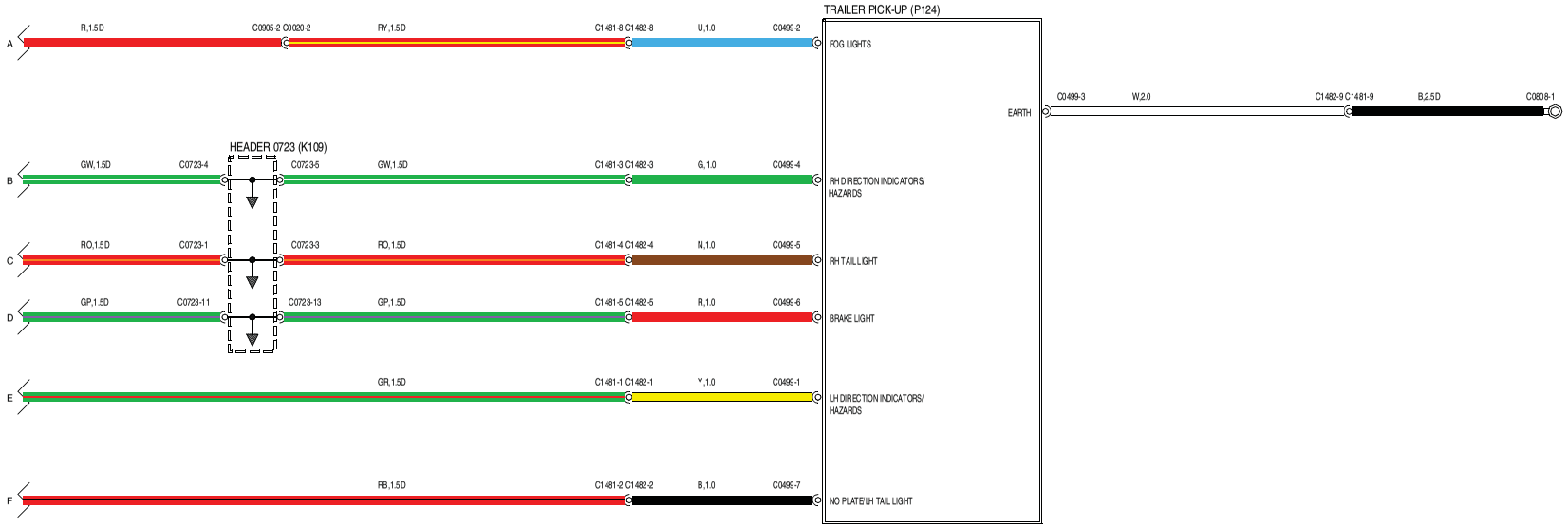

VWR125030-A-02