Rear axle component layout

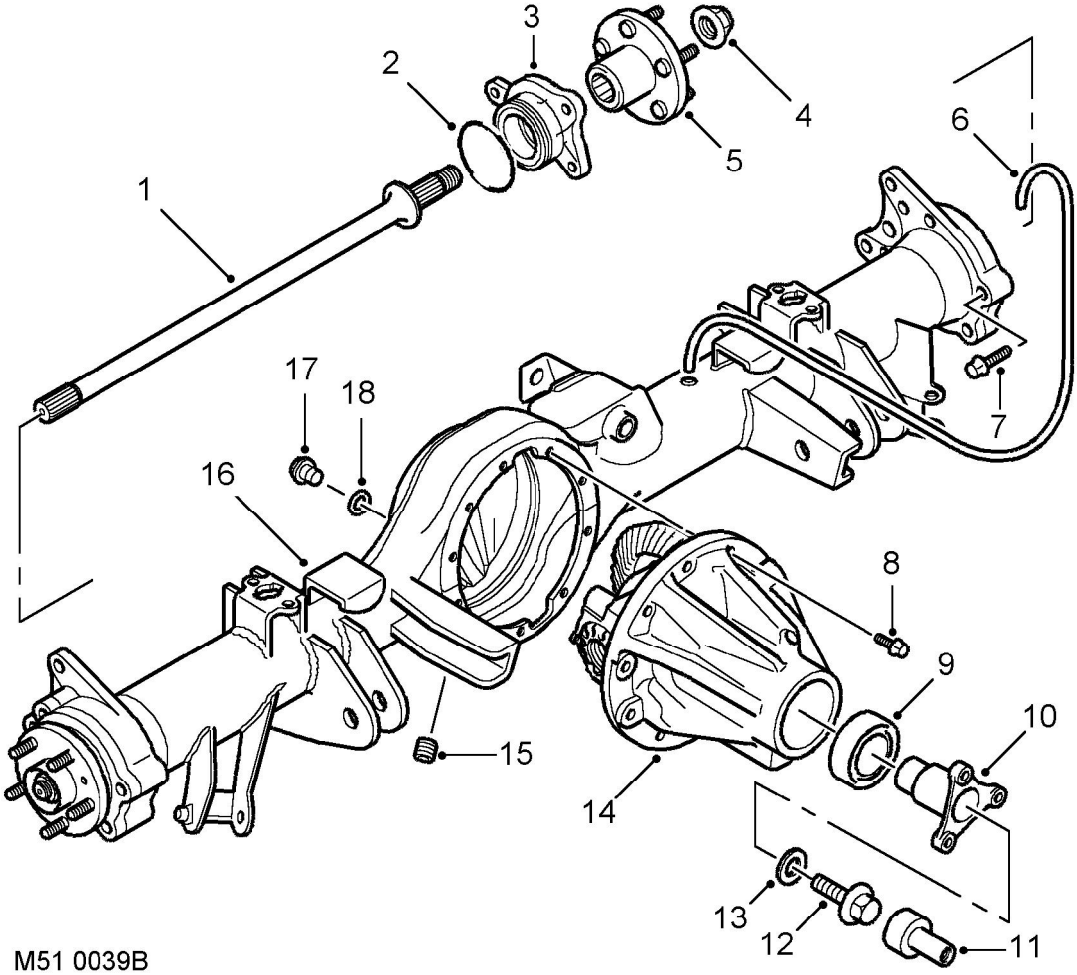

1 Drive shaft
2 'O' ring
3 Hub bearing
4 Stake nut
5 Hub flange
6 Breather tube
7 Bolt
8 Bolt
9 Oil seal
10 Pinion flange
11 Centralising peg
12 Bolt
13 Washer
14 Differential unit
15 Drain plug
16 Axle casing
17 Oil level plug
18 'O' ring

PDF Creator - PDF4Free v3.0 http://www.pdf4free.com