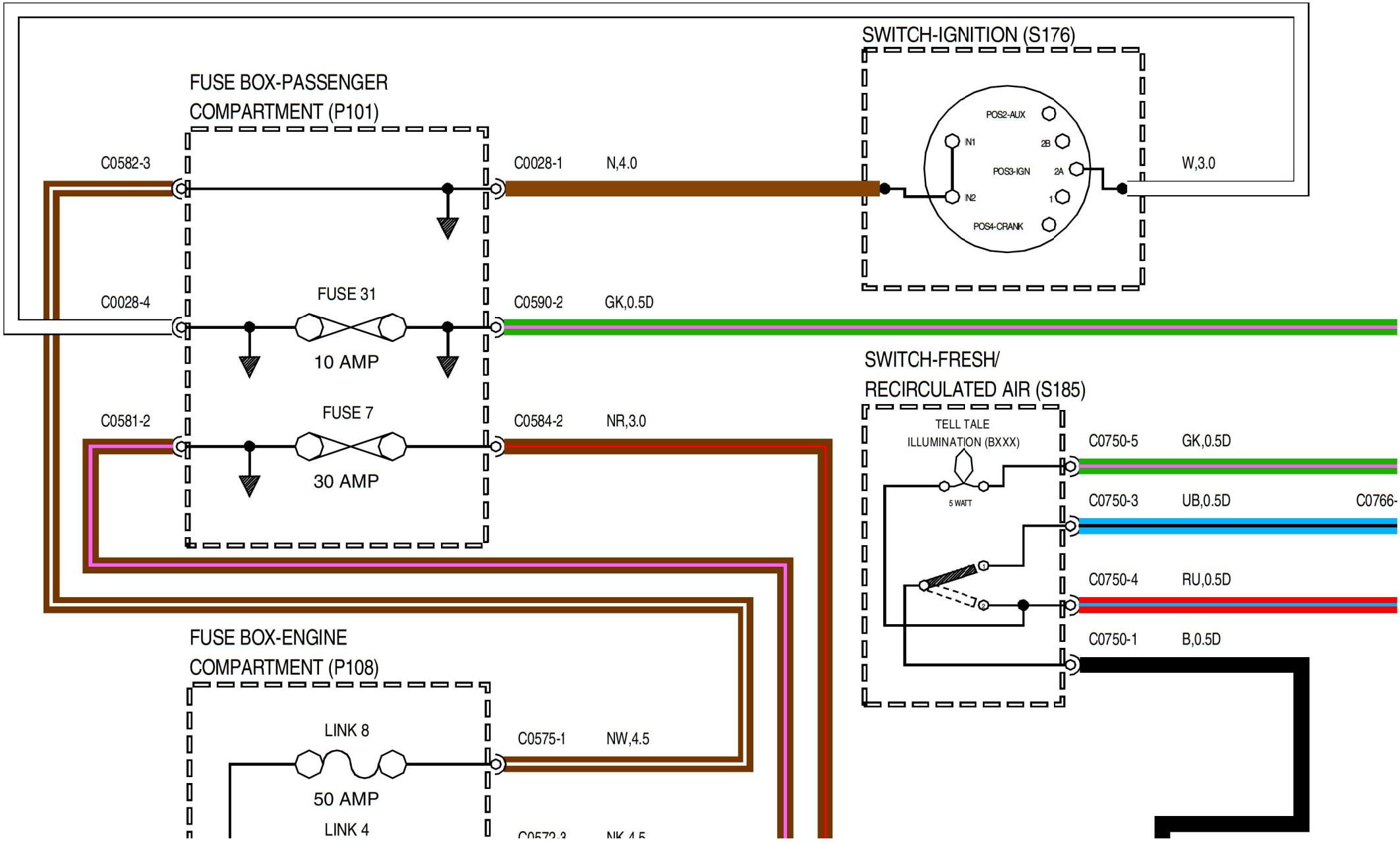

PDF Creator - PDF4Free v2.0
http://www.pdf4free.com