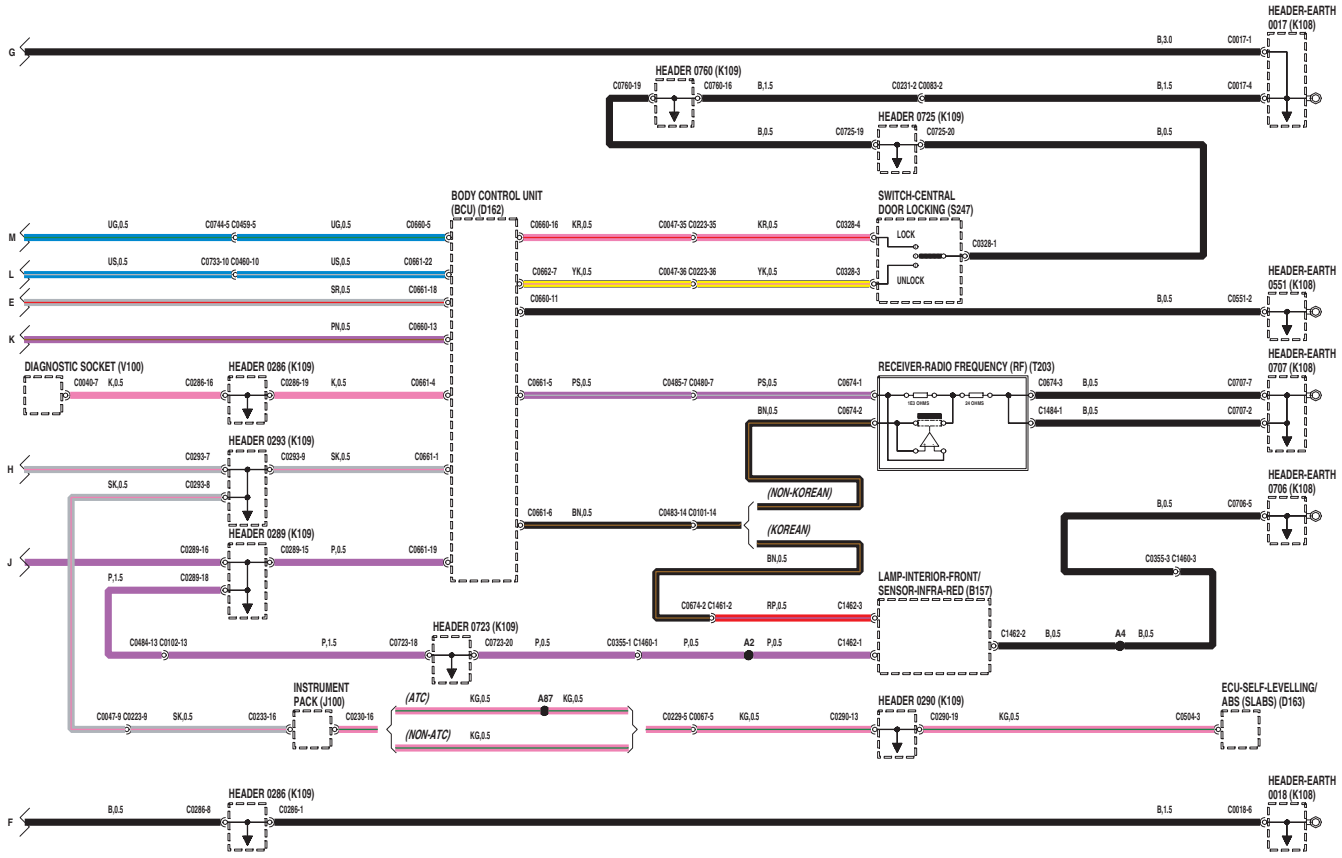CENTRAL DOOR LOCKING