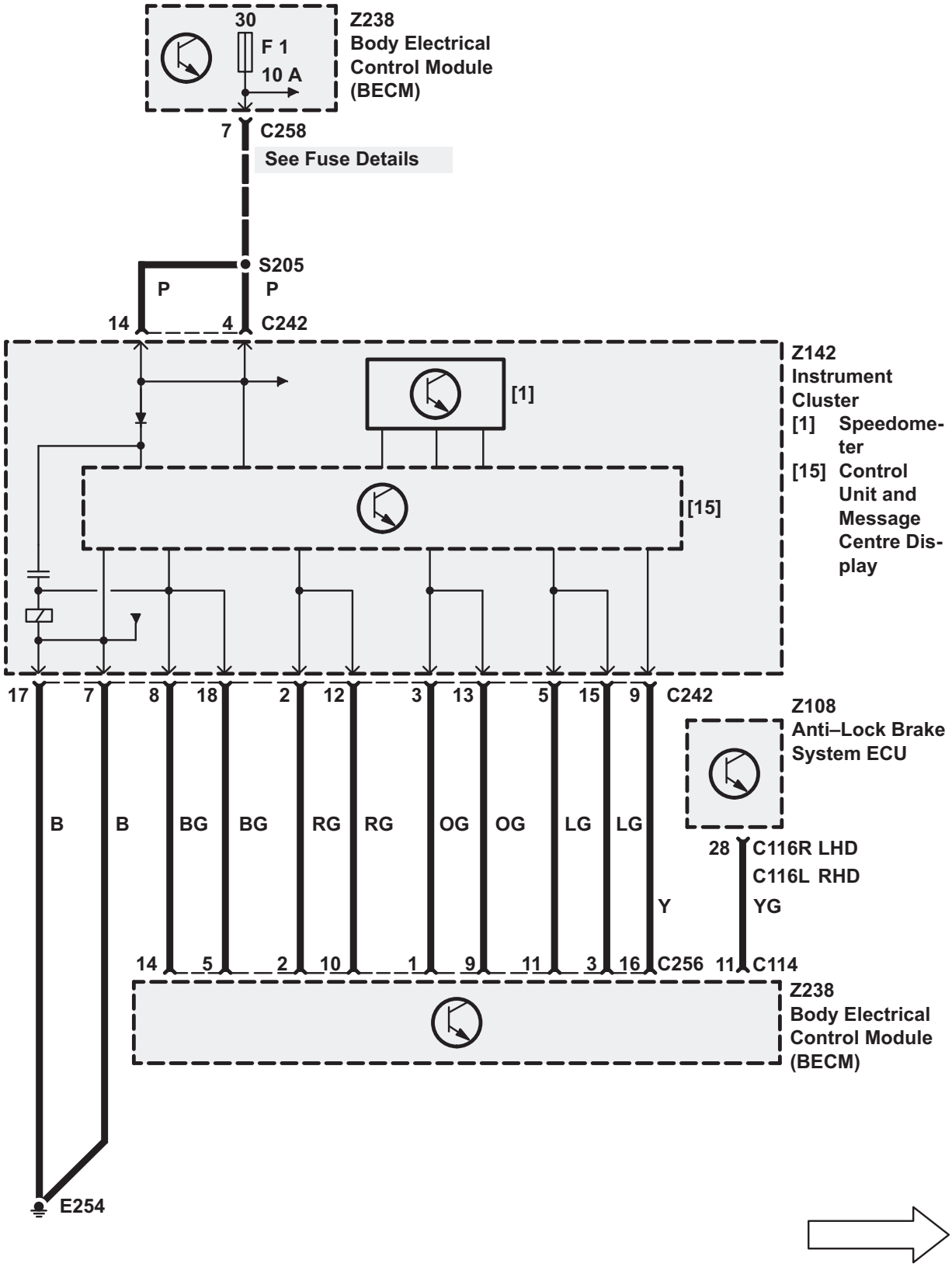
30
F 1
10 A
Z238
Body Electrical
Control Module
(BECM)
7
C258
See Fuse Details
S205
P
P
14
4
C242
[1]
[15]
Z142
Instrument
Cluster
[1] Speedometer
[15] Control Unit and Message Centre Display
17
7
8
18
2
12
3
13
5
15
9
C242
Z108
Anti–Lock Brake
System ECU
B
B
BG
BG
RG
RG
OG
OG
LG
LG
Y
28
C116R LHD
C116L RHD
YG
14
5
2
10
1
9
11
3
16
C256
11
C114
Z238
Body Electrical
Control Module
(BECM)
E254