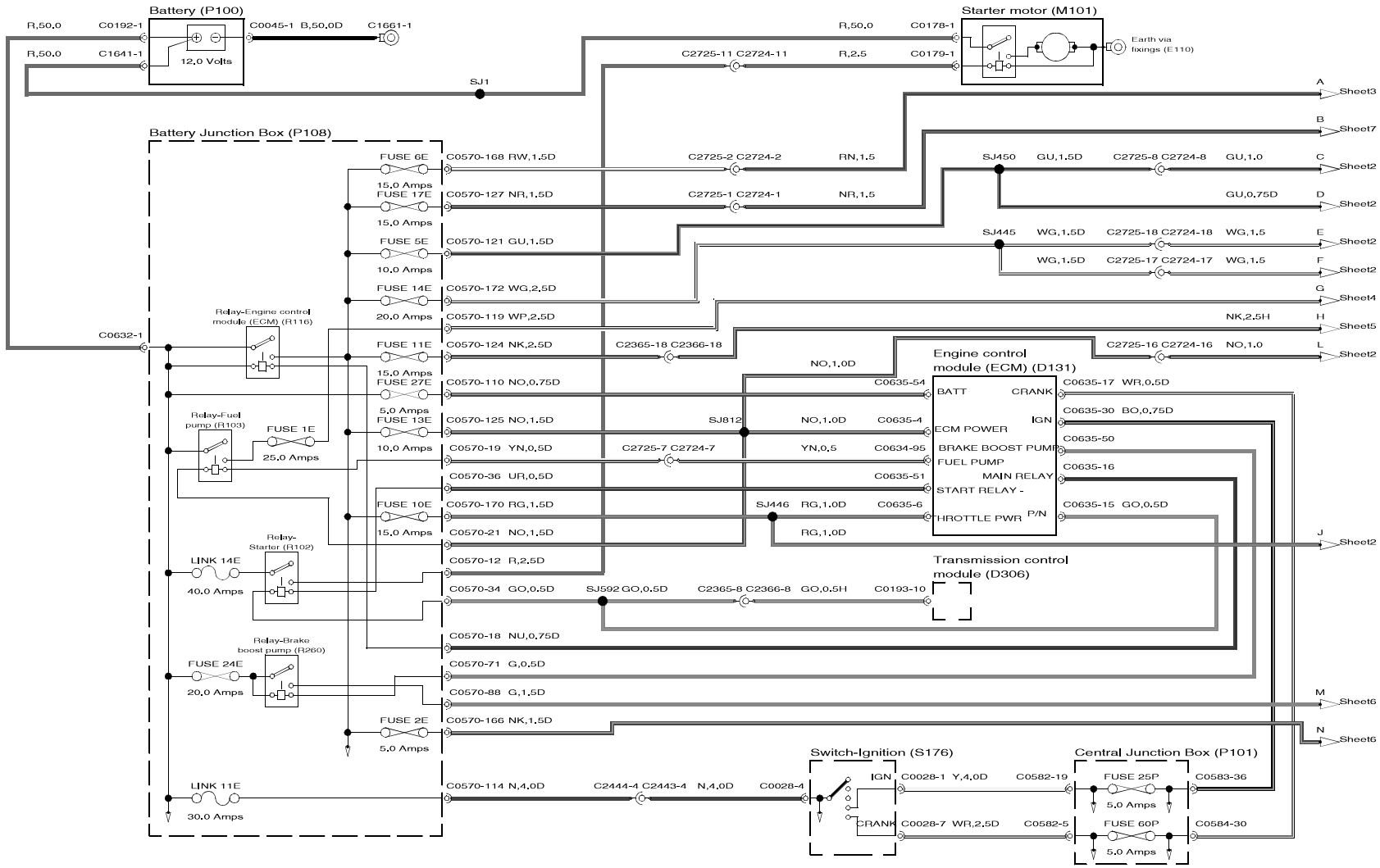
Battery (P100)
12.0 Volts
R,50.0 C0192-1
R,50.0 C1641-1
C0045-1 B,50.0D
C1661-1
SJ1
Starter motor (M101)
Earth via fixings (E110)
R,50.0 C0178-1
C2725-11 C2724-11 R,2.5 C0179-1
Battery Junction Box (P108)
FUSE 6E 15.0 Amps
FUSE 17E 15.0 Amps
FUSE 5E 10.0 Amps
FUSE 14E 20.0 Amps
FUSE 11E 15.0 Amps
FUSE 27E 5.0 Amps
FUSE 13E 10.0 Amps
FUSE 10E 15.0 Amps
FUSE 1E 25.0 Amps
FUSE 24E 20.0 Amps
FUSE 2E 5.0 Amps
LINK 14E 40.0 Amps
LINK 11E 30.0 Amps
Relay-Engine control module (ECM) (R116)
Relay-Fuel pump (R103)
Relay-Starter (R102)
Relay-Brake boost pump (R260)
C0632-1
C0570-168 RW,1.5D
C0570-127 NR,1.5D
C0570-121 GU,1.5D
C0570-172 WG,2.5D
C0570-119 WP,2.5D
C0570-124 NK,2.5D
C0570-110 NO,0.75D
C0570-125 NO,1.5D
C0570-19 YN,0.5D
C0570-36 UR,0.5D
C0570-170 RG,1.5D
C0570-21 NO,1.5D
C0570-12 R,2.5D
C0570-34 GO,0.5D
C0570-18 NU,0.75D
C0570-71 G,0.5D
C0570-88 G,1.5D
C0570-166 NK,1.5D
C0570-114 N,4.0D
C2725-2 C2724-2 RN,1.5
C2725-1 C2724-1 NR,1.5
C2365-18 C2366-18
C2725-7 C2724-7
SJ812
SJ446 RG,1.0D
SJ592 GO,0.5D
C2365-8 C2366-8 GO,0.5H
C0193-10
C2444-4 C2443-4 N,4.0D
C0028-4
SJ450 GU,1.5D
C2725-8 C2724-8 GU,1.0
GU,0.75D
SJ445 WG,1.5D
C2725-18 C2724-18 WG,1.5
WG,1.5D
C2725-17 C2724-17 WG,1.5
NK,2.5H
C2725-16 C2724-16 NO,1.0
NO,1.0D
Engine control module (ECM) (D131)
BATT
CRANK
ECM POWER
IGN
BRAKE BOOST PUMP
FUEL PUMP
MAIN RELAY
START RELAY -
THROTTLE PWR
P/N
C0635-54
C0635-17 WR,0.5D
C0635-30 BO,0.75D
C0635-4
C0635-50
C0634-95
C0635-16
C0635-51
C0635-6
C0635-15 GO,0.5D
Transmission control module (D306)
Switch-Ignition (S176)
IGN
CRANK
C0028-1 Y,4.0D
C0028-7 WR,2.5D
C0582-19
C0582-5
Central Junction Box (P101)
FUSE 25P 5.0 Amps
FUSE 60P 5.0 Amps
C0583-36
C0584-30
A Sheet3
B Sheet7
C Sheet2
D Sheet2
E Sheet2
F Sheet2
G Sheet4
H Sheet5
L Sheet2
J Sheet2
M Sheet6
N Sheet6