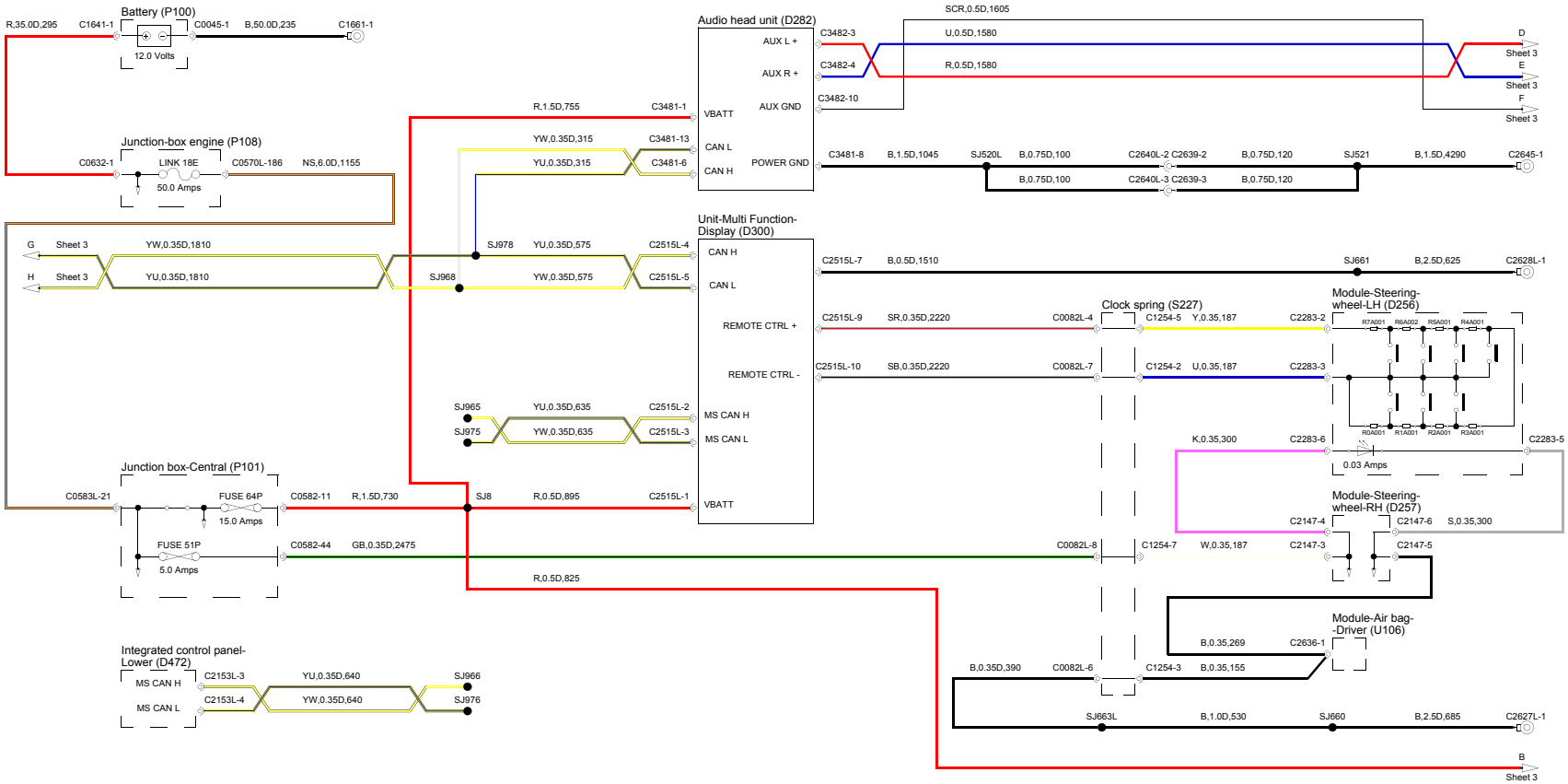
Battery (P100)
R,35.0D,295
C1641-1
C0045-1
B,50.0D,235
C1661-1
12.0 Volts
Junction-box engine (P108)
C0632-1
LINK 18E
C0570L-186
NS,6.0D,1155
50.0 Amps
Junction box-Central (P101)
C0583L-21
FUSE 64P
15.0 Amps
C0582-11
R,1.5D,730
SJ8
R,0.5D,895
C2515L-1
FUSE 51P
5.0 Amps
C0582-44
GB,0.35D,2475
R,0.5D,825
Integrated control panel-
Lower (D472)
MS CAN H
MS CAN L
C2153L-3
C2153L-4
YU,0.35D,640
YW,0.35D,640
SJ966
SJ976
Audio head unit (D282)
AUX L +
AUX R +
AUX GND
VBATT
CAN L
CAN H
POWER GND
C3482-3
C3482-4
C3482-10
SCR,0.5D,1605
U,0.5D,1580
R,0.5D,1580
D
Sheet 3
E
Sheet 3
F
Sheet 3
R,1.5D,755
C3481-1
YW,0.35D,315
C3481-13
YU,0.35D,315
C3481-6
C3481-8
B,1.5D,1045
SJ520L
B,0.75D,100
C2640L-2
C2639-2
B,0.75D,120
SJ521
B,1.5D,4290
C2645-1
B,0.75D,100
C2640L-3
C2639-3
B,0.75D,120
Unit-Multi Function-
Display (D300)
CAN H
CAN L
REMOTE CTRL +
REMOTE CTRL -
MS CAN H
MS CAN L
VBATT
G
Sheet 3
H
Sheet 3
YW,0.35D,1810
YU,0.35D,1810
SJ978
YU,0.35D,575
C2515L-4
SJ968
YW,0.35D,575
C2515L-5
SJ965
YU,0.35D,635
C2515L-2
SJ975
YW,0.35D,635
C2515L-3
C2515L-7
B,0.5D,1510
SJ661
B,2.5D,625
C2628L-1
C2515L-9
SR,0.35D,2220
C0082L-4
Clock spring (S227)
C1254-5
Y,0.35,187
C2283-2
Module-Steering-
wheel-LH (D256)
R7A001
R6A002
R5A001
R4A001
C2515L-10
SB,0.35D,2220
C0082L-7
C1254-2
U,0.35,187
C2283-3
R0A001
R1A001
R2A001
R3A001
K,0.35,300
C2283-6
C2283-5
0.03 Amps
Module-Steering-
wheel-RH (D257)
C2147-4
C2147-6
S,0.35,300
C0082L-8
C1254-7
W,0.35,187
C2147-3
C2147-5
Module-Air bag-
-Driver (U106)
B,0.35,269
C2636-1
B,0.35D,390
C0082L-6
C1254-3
B,0.35,155
SJ663L
B,1.0D,530
SJ660
B,2.5D,685
C2627L-1
B
Sheet 3

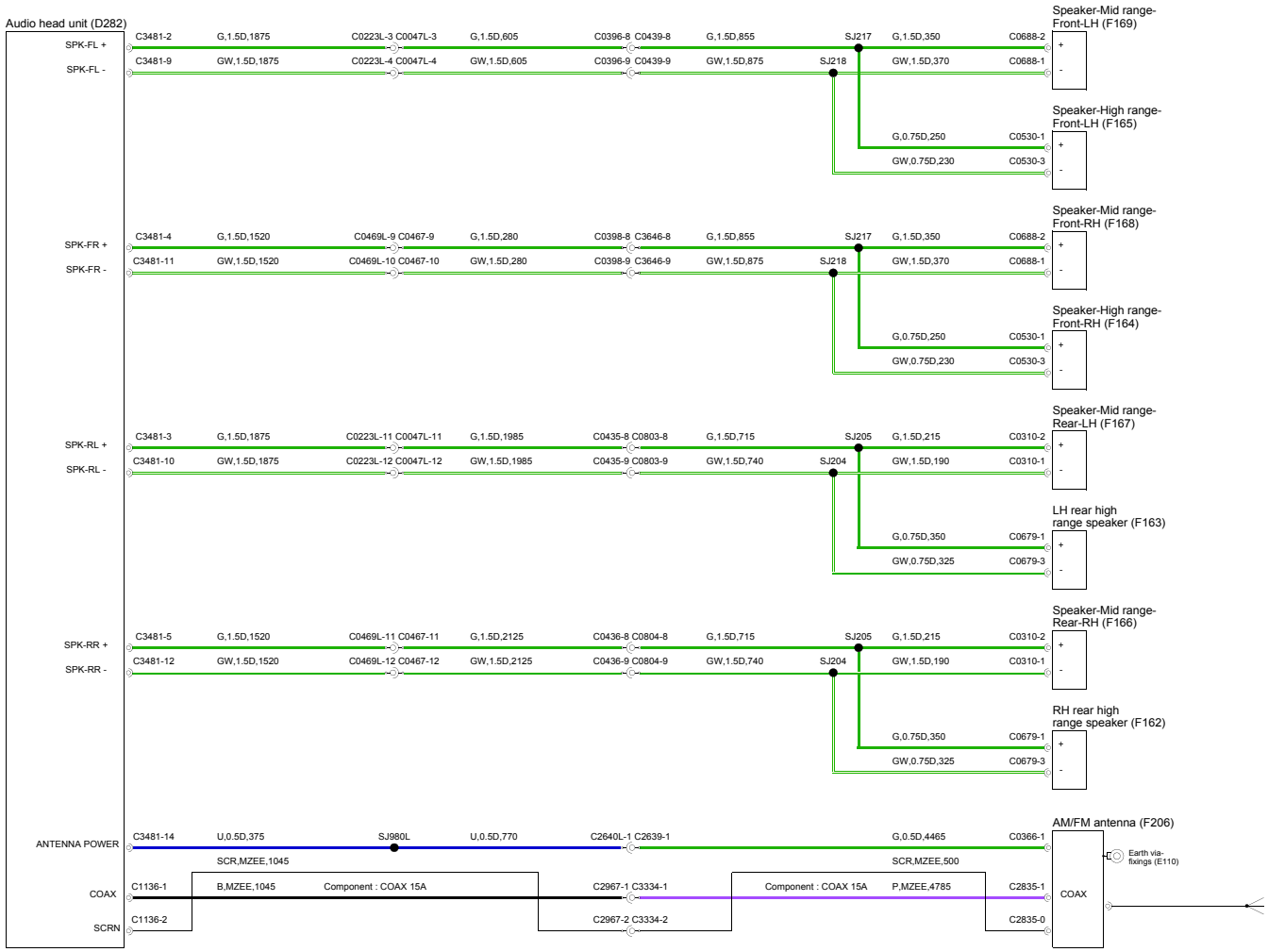
Audio head unit (D282)
SPK-FL +
SPK-FL -
C3481-2 G,1.5D,1875 C0223L-3 C0047L-3 G,1.5D,605 C0396-8 C0439-8 G,1.5D,855 SJ217 G,1.5D,350 C0688-2
C3481-9 GW,1.5D,1875 C0223L-4 C0047L-4 GW,1.5D,605 C0396-9 C0439-9 GW,1.5D,875 SJ218 GW,1.5D,370 C0688-1
Speaker-Mid range-Front-LH (F169)
G,0.75D,250 C0530-1
GW,0.75D,230 C0530-3
Speaker-High range-Front-LH (F165)
SPK-FR +
SPK-FR -
C3481-4 G,1.5D,1520 C0469L-9 C0467-9 G,1.5D,280 C0398-8 C3646-8 G,1.5D,855 SJ217 G,1.5D,350 C0688-2
C3481-11 GW,1.5D,1520 C0469L-10 C0467-10 GW,1.5D,280 C0398-9 C3646-9 GW,1.5D,875 SJ218 GW,1.5D,370 C0688-1
Speaker-Mid range-Front-RH (F168)
G,0.75D,250 C0530-1
GW,0.75D,230 C0530-3
Speaker-High range-Front-RH (F164)
SPK-RL +
SPK-RL -
C3481-3 G,1.5D,1875 C0223L-11 C0047L-11 G,1.5D,1985 C0435-8 C0803-8 G,1.5D,715 SJ205 G,1.5D,215 C0310-2
C3481-10 GW,1.5D,1875 C0223L-12 C0047L-12 GW,1.5D,1985 C0435-9 C0803-9 GW,1.5D,740 SJ204 GW,1.5D,190 C0310-1
Speaker-Mid range-Rear-LH (F167)
G,0.75D,350 C0679-1
GW,0.75D,325 C0679-3
LH rear high range speaker (F163)
SPK-RR +
SPK-RR -
C3481-5 G,1.5D,1520 C0469L-11 C0467-11 G,1.5D,2125 C0436-8 C0804-8 G,1.5D,715 SJ205 G,1.5D,215 C0310-2
C3481-12 GW,1.5D,1520 C0469L-12 C0467-12 GW,1.5D,2125 C0436-9 C0804-9 GW,1.5D,740 SJ204 GW,1.5D,190 C0310-1
Speaker-Mid range-Rear-RH (F166)
G,0.75D,350 C0679-1
GW,0.75D,325 C0679-3
RH rear high range speaker (F162)
ANTENNA POWER
C3481-14 U,0.5D,375 SJ980L U,0.5D,770 C2640L-1 C2639-1 G,0.5D,4465 C0366-1
SCR,MZEE,1045 SCR,MZEE,500
AM/FM antenna (F206)
Earth via-fixings (E110)
COAX
C1136-1 B,MZEE,1045 Component : COAX 15A C2967-1 C3334-1 Component : COAX 15A P,MZEE,4785 C2835-1
SCRN
C1136-2 C2967-2 C3334-2 C2835-0

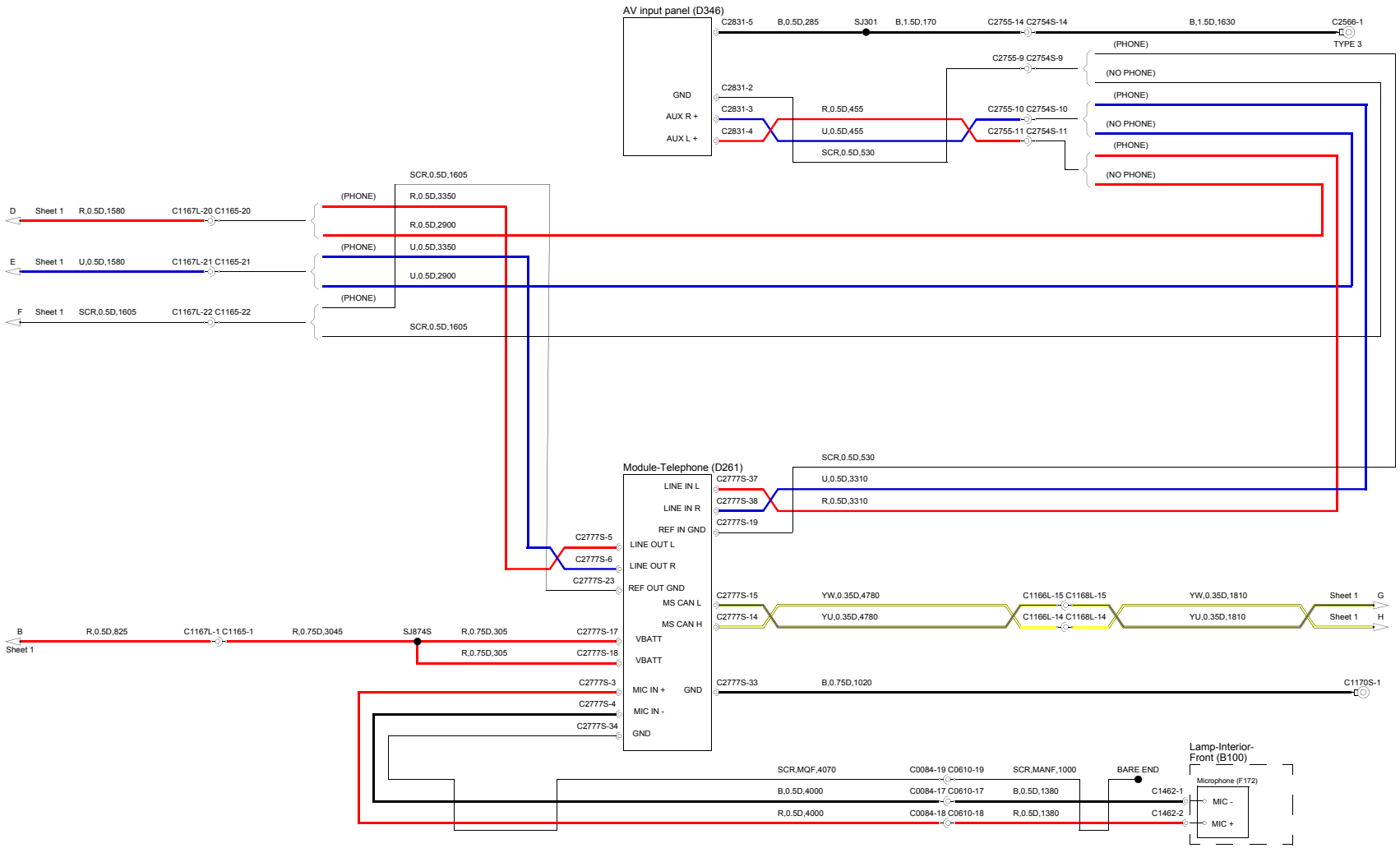
AV input panel (D346)
C2831-5
B,0.5D,285
SJ301
B,1.5D,170
C2755-14 C2754S-14
B,1.5D,1630
C2566-1
TYPE 3
(PHONE)
C2755-9 C2754S-9
(NO PHONE)
GND
C2831-2
AUX R +
C2831-3
R,0.5D,455
C2755-10 C2754S-10
(PHONE)
(NO PHONE)
AUX L +
C2831-4
U,0.5D,455
C2755-11 C2754S-11
SCR,0.5D,530
(PHONE)
(NO PHONE)
SCR,0.5D,1605
D
Sheet 1
R,0.5D,1580
C1167L-20 C1165-20
(PHONE)
R,0.5D,3350
R,0.5D,2900
E
Sheet 1
U,0.5D,1580
C1167L-21 C1165-21
(PHONE)
U,0.5D,3350
U,0.5D,2900
F
Sheet 1
SCR,0.5D,1605
C1167L-22 C1165-22
(PHONE)
SCR,0.5D,1605
Module-Telephone (D261)
SCR,0.5D,530
LINE IN L
C2777S-37
U,0.5D,3310
LINE IN R
C2777S-38
R,0.5D,3310
REF IN GND
C2777S-19
C2777S-5
LINE OUT L
C2777S-6
LINE OUT R
C2777S-23
REF OUT GND
C2777S-15
YW,0.35D,4780
C1166L-15 C1168L-15
YW,0.35D,1810
Sheet 1
G
MS CAN L
C2777S-14
YU,0.35D,4780
C1166L-14 C1168L-14
YU,0.35D,1810
Sheet 1
H
MS CAN H
B
Sheet 1
R,0.5D,825
C1167L-1 C1165-1
R,0.75D,3045
SJ874S
R,0.75D,305
C2777S-17
VBATT
R,0.75D,305
C2777S-18
VBATT
C2777S-3
MIC IN +
GND
C2777S-33
B,0.75D,1020
C1170S-1
C2777S-4
MIC IN -
C2777S-34
GND
Lamp-Interior-Front (B100)
SCR,MQF,4070
C0084-19 C0610-19
SCR,MANF,1000
BARE END
Microphone (F172)
B,0.5D,4000
C0084-17 C0610-17
B,0.5D,1380
C1462-1
MIC -
R,0.5D,4000
C0084-18 C0610-18
R,0.5D,1380
C1462-2
MIC +

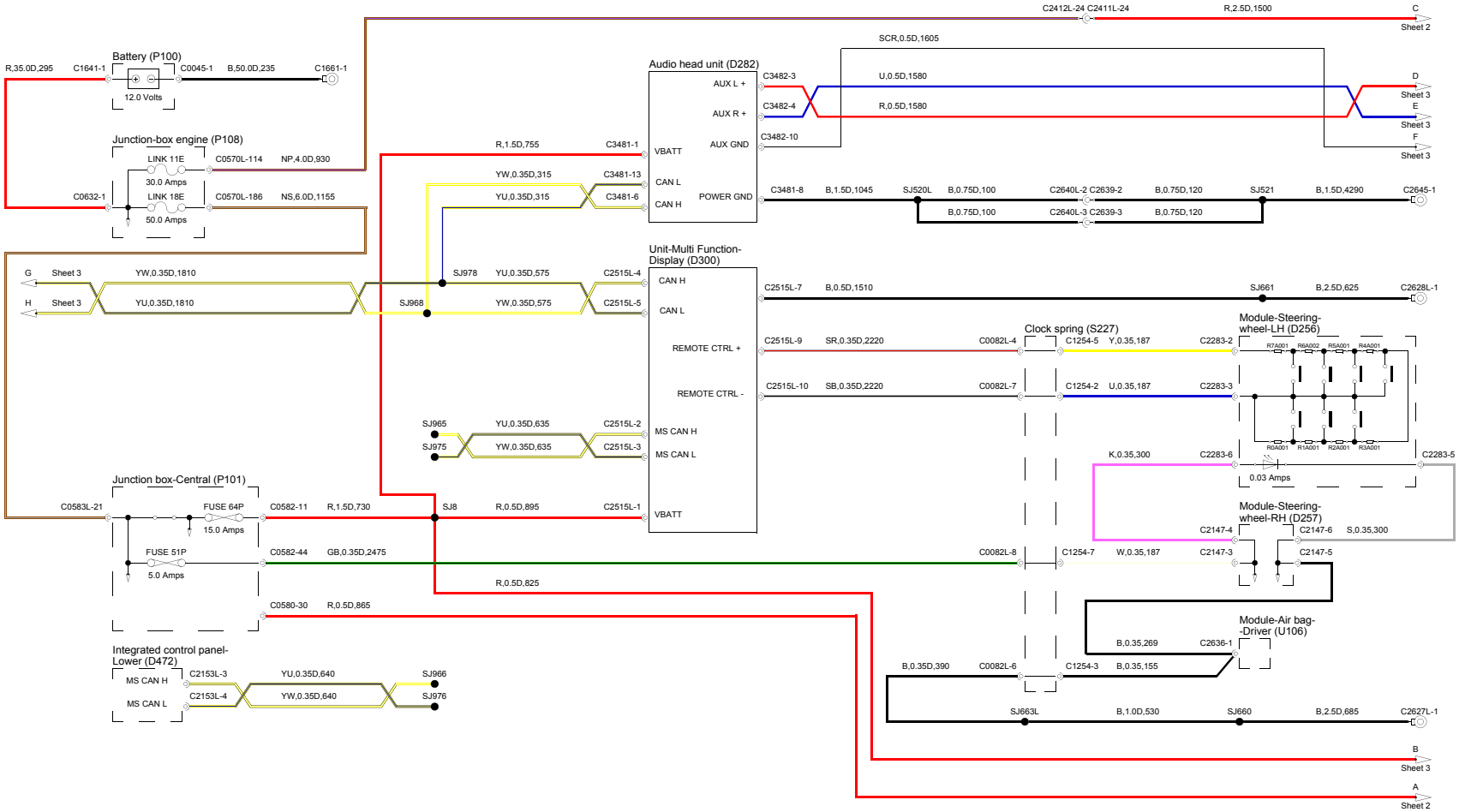
Battery (P100)
R,35.0D,295
C1641-1
C0045-1
B,50.0D,235
C1661-1
12.0 Volts
Junction-box engine (P108)
LINK 11E
C0570L-114
NP,4.0D,930
30.0 Amps
C0632-1
LINK 18E
C0570L-186
NS,6.0D,1155
50.0 Amps
Junction box-Central (P101)
C0583L-21
FUSE 64P
15.0 Amps
C0582-11
R,1.5D,730
SJ8
R,0.5D,895
C2515L-1
FUSE 51P
5.0 Amps
C0582-44
GB,0.35D,2475
R,0.5D,825
C0580-30
R,0.5D,865
Integrated control panel-
Lower (D472)
MS CAN H
MS CAN L
C2153L-3
C2153L-4
YU,0.35D,640
YW,0.35D,640
SJ966
SJ976
G
Sheet 3
YW,0.35D,1810
H
Sheet 3
YU,0.35D,1810
SJ968
SJ978
YU,0.35D,575
YW,0.35D,575
C2515L-4
C2515L-5
SJ965
SJ975
YU,0.35D,635
YW,0.35D,635
C2515L-2
C2515L-3
R,1.5D,755
C3481-1
YW,0.35D,315
YU,0.35D,315
C3481-13
C3481-6
Audio head unit (D282)
AUX L +
AUX R +
AUX GND
VBATT
CAN L
CAN H
POWER GND
C3482-3
C3482-4
C3482-10
C3481-8
B,1.5D,1045
SJ520L
B,0.75D,100
C2640L-2
C2639-2
B,0.75D,120
SJ521
B,1.5D,4290
C2645-1
B,0.75D,100
C2640L-3
C2639-3
B,0.75D,120
Unit-Multi Function-
Display (D300)
CAN H
CAN L
REMOTE CTRL +
REMOTE CTRL -
MS CAN H
MS CAN L
VBATT
C2412L-24
C2411L-24
R,2.5D,1500
C
Sheet 2
SCR,0.5D,1605
U,0.5D,1580
R,0.5D,1580
D
Sheet 3
E
Sheet 3
F
Sheet 3
C2515L-7
B,0.5D,1510
SJ661
B,2.5D,625
C2628L-1
C2515L-9
SR,0.35D,2220
C0082L-4
Clock spring (S227)
C1254-5
Y,0.35,187
C2283-2
Module-Steering-
wheel-LH (D256)
R7A001
R6A002
R5A001
R4A001
C2515L-10
SB,0.35D,2220
C0082L-7
C1254-2
U,0.35,187
C2283-3
R0A001
R1A001
R2A001
R3A001
K,0.35,300
C2283-6
C2283-5
0.03 Amps
Module-Steering-
wheel-RH (D257)
C2147-4
C2147-6
S,0.35,300
C0082L-8
C1254-7
W,0.35,187
C2147-3
C2147-5
Module-Air bag-
-Driver (U106)
B,0.35,269
C2636-1
B,0.35D,390
C0082L-6
C1254-3
B,0.35,155
SJ663L
B,1.0D,530
SJ660
B,2.5D,685
C2627L-1
B
Sheet 3
A
Sheet 2

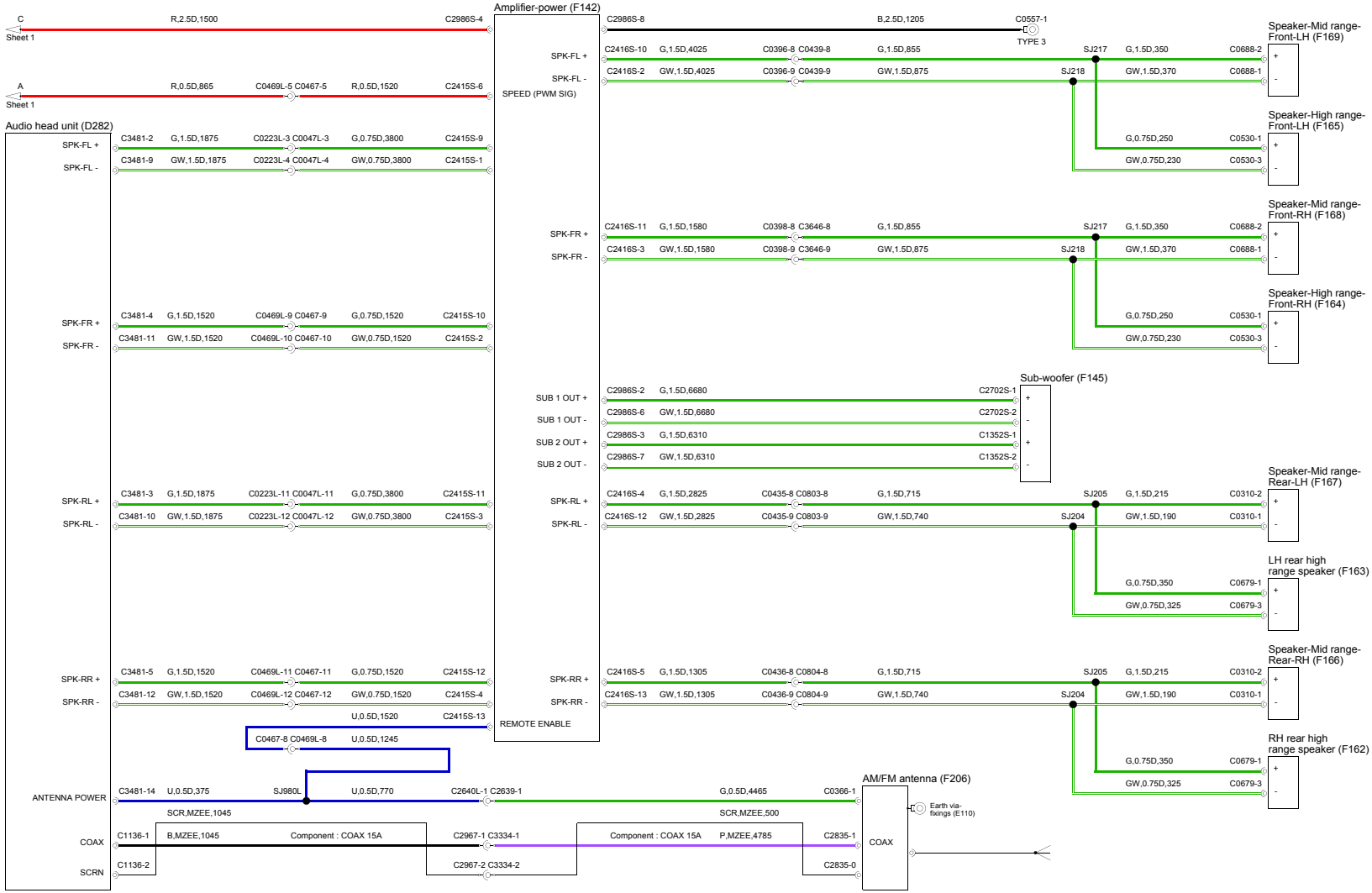
Amplifier-power (F142)
Audio head unit (D282)
Speaker-Mid range-Front-LH (F169)
Speaker-High range-Front-LH (F165)
Speaker-Mid range-Front-RH (F168)
Speaker-High range-Front-RH (F164)
Sub-woofer (F145)
Speaker-Mid range-Rear-LH (F167)
LH rear high range speaker (F163)
Speaker-Mid range-Rear-RH (F166)
RH rear high range speaker (F162)
AM/FM antenna (F206)
SPK-FL +
SPK-FL -
SPK-FR +
SPK-FR -
SPK-RL +
SPK-RL -
SPK-RR +
SPK-RR -
SUB 1 OUT +
SUB 1 OUT -
SUB 2 OUT +
SUB 2 OUT -
SPEED (PWM SIG)
REMOTE ENABLE
ANTENNA POWER
COAX
SCRN
Sheet 1
TYPE 3
Earth via-fixings (E110)
Component : COAX 15A

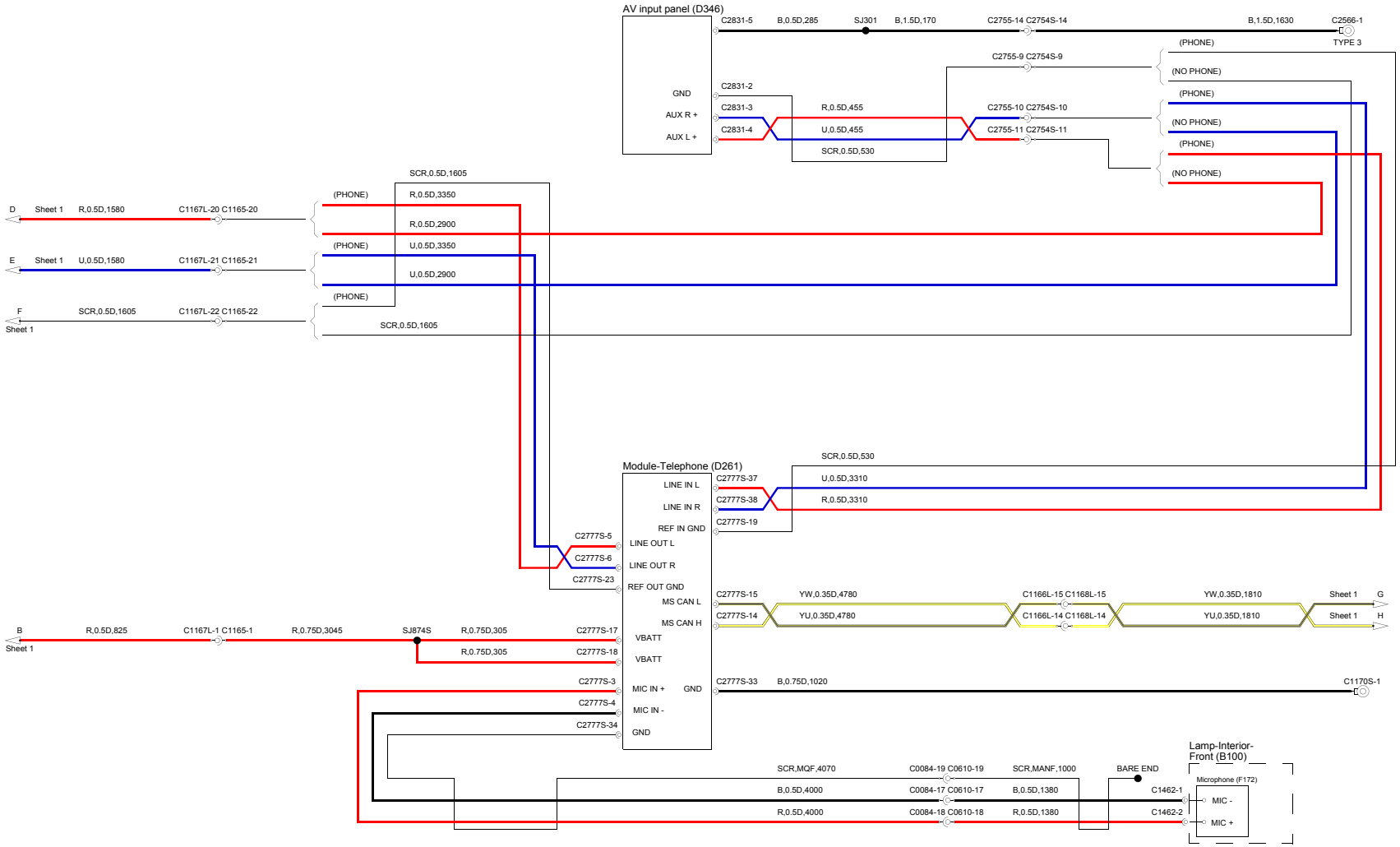
AV input panel (D346)
C2831-5
B,0.5D,285
SJ301
B,1.5D,170
C2755-14 C2754S-14
B,1.5D,1630
C2566-1
TYPE 3
(PHONE)
C2755-9 C2754S-9
(NO PHONE)
GND
C2831-2
AUX R +
C2831-3
R,0.5D,455
C2755-10 C2754S-10
(PHONE)
(NO PHONE)
AUX L +
C2831-4
U,0.5D,455
C2755-11 C2754S-11
SCR,0.5D,530
(PHONE)
(NO PHONE)
SCR,0.5D,1605
D
Sheet 1
R,0.5D,1580
C1167L-20 C1165-20
(PHONE)
R,0.5D,3350
R,0.5D,2900
E
Sheet 1
U,0.5D,1580
C1167L-21 C1165-21
(PHONE)
U,0.5D,3350
U,0.5D,2900
F
Sheet 1
SCR,0.5D,1605
C1167L-22 C1165-22
(PHONE)
SCR,0.5D,1605
Module-Telephone (D261)
SCR,0.5D,530
LINE IN L
C2777S-37
U,0.5D,3310
LINE IN R
C2777S-38
R,0.5D,3310
REF IN GND
C2777S-19
C2777S-5
LINE OUT L
C2777S-6
LINE OUT R
C2777S-23
REF OUT GND
MS CAN L
C2777S-15
YW,0.35D,4780
C1166L-15 C1168L-15
YW,0.35D,1810
Sheet 1
G
MS CAN H
C2777S-14
YU,0.35D,4780
C1166L-14 C1168L-14
YU,0.35D,1810
Sheet 1
H
B
Sheet 1
R,0.5D,825
C1167L-1 C1165-1
R,0.75D,3045
SJ874S
R,0.75D,305
C2777S-17
VBATT
R,0.75D,305
C2777S-18
VBATT
C2777S-3
MIC IN +
GND
C2777S-33
B,0.75D,1020
C1170S-1
C2777S-4
MIC IN -
C2777S-34
GND
Lamp-Interior-Front (B100)
SCR,MQF,4070
C0084-19 C0610-19
SCR,MANF,1000
BARE END
Microphone (F172)
B,0.5D,4000
C0084-17 C0610-17
B,0.5D,1380
C1462-1
MIC -
R,0.5D,4000
C0084-18 C0610-18
R,0.5D,1380
C1462-2
MIC +

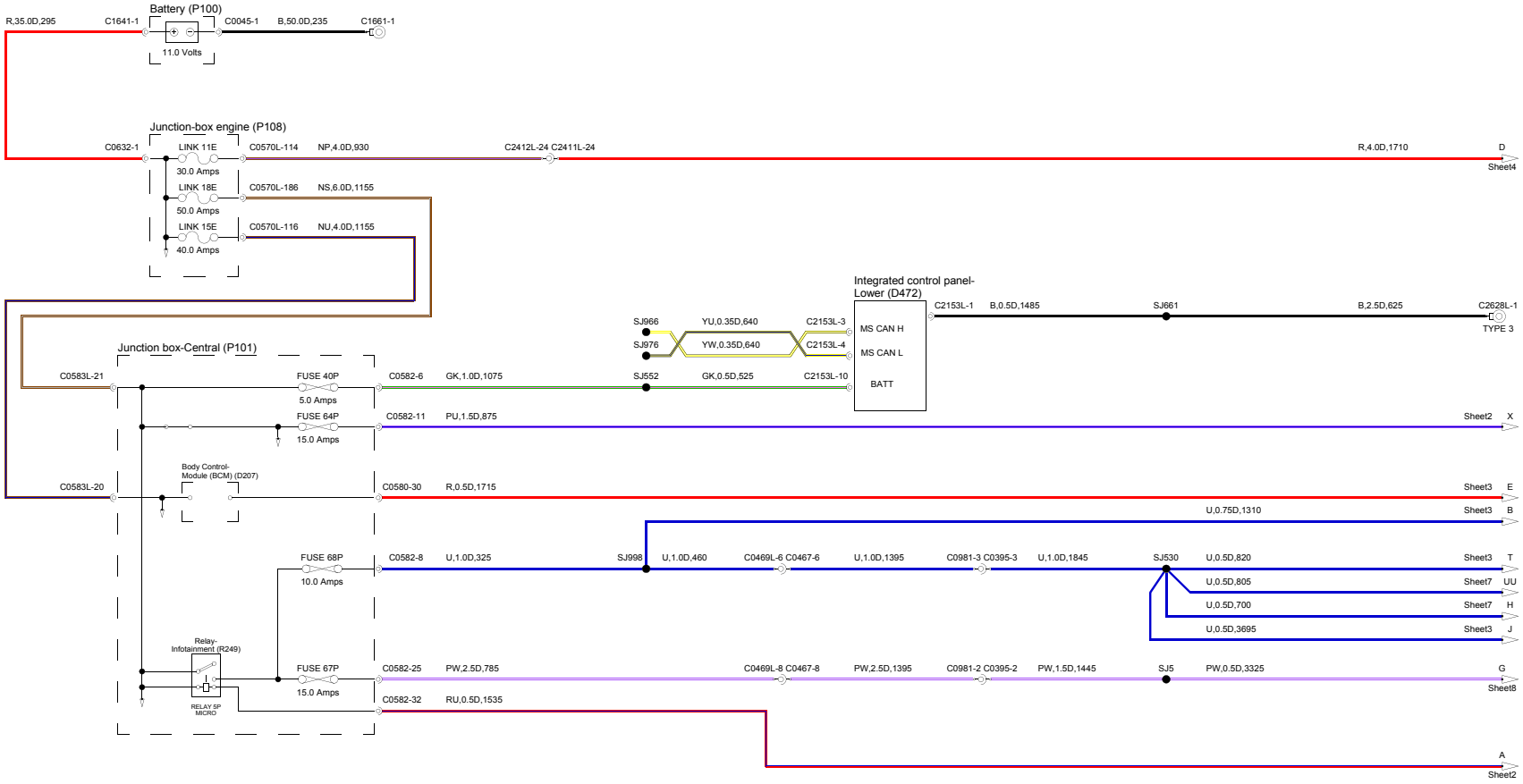
Battery (P100)
R,35.0D,295
C1641-1
C0045-1
B,50.0D,235
C1661-1
11.0 Volts
Junction-box engine (P108)
C0632-1
LINK 11E
30.0 Amps
C0570L-114
NP,4.0D,930
C2412L-24 C2411L-24
R,4.0D,1710
D
Sheet4
LINK 18E
50.0 Amps
C0570L-186
NS,6.0D,1155
LINK 15E
40.0 Amps
C0570L-116
NU,4.0D,1155
Integrated control panel-Lower (D472)
C2153L-1
B,0.5D,1485
SJ661
B,2.5D,625
C2628L-1
TYPE 3
SJ966
YU,0.35D,640
C2153L-3
SJ976
YW,0.35D,640
C2153L-4
MS CAN H
MS CAN L
BATT
Junction box-Central (P101)
C0583L-21
FUSE 40P
5.0 Amps
C0582-6
GK,1.0D,1075
SJ552
GK,0.5D,525
C2153L-10
FUSE 64P
15.0 Amps
C0582-11
PU,1.5D,875
Sheet2
X
Body Control-Module (BCM) (D207)
C0583L-20
C0580-30
R,0.5D,1715
Sheet3
E
U,0.75D,1310
B
FUSE 68P
10.0 Amps
C0582-8
U,1.0D,325
SJ998
U,1.0D,460
C0469L-6 C0467-6
U,1.0D,1395
C0981-3 C0395-3
U,1.0D,1845
SJ530
U,0.5D,820
T
U,0.5D,805
Sheet7
UU
U,0.5D,700
H
U,0.5D,3695
J
Relay-Infotainment (R249)
RELAY SP MICRO
FUSE 67P
15.0 Amps
C0582-25
PW,2.5D,785
C0469L-8 C0467-8
PW,2.5D,1395
C0981-2 C0395-2
PW,1.5D,1445
SJ5
PW,0.5D,3325
G
Sheet8
C0582-32
RU,0.5D,1535
A
Sheet2

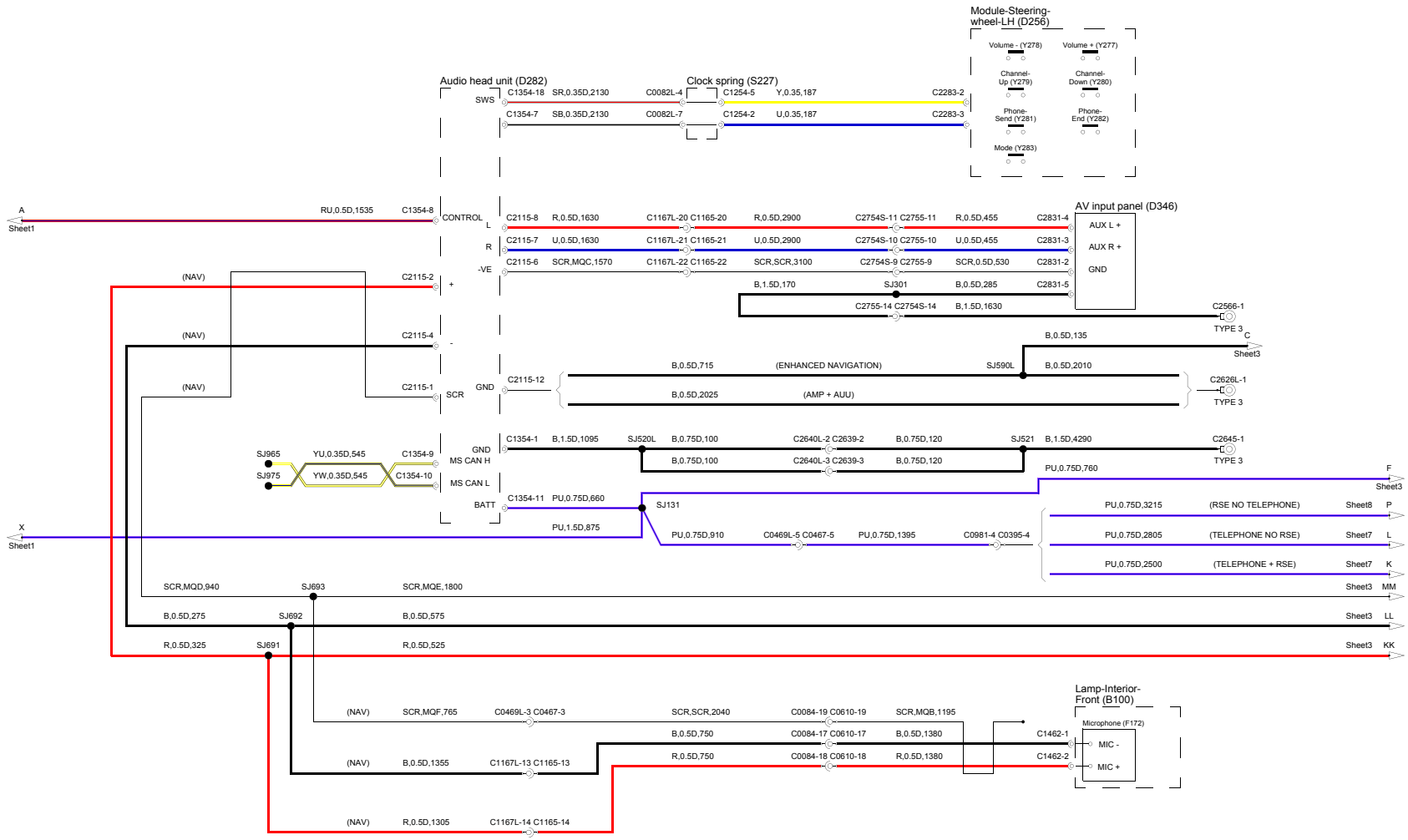
Module-Steering-wheel-LH (D256)
Volume - (Y278)
Volume + (Y277)
Channel-Up (Y279)
Channel-Down (Y280)
Phone-Send (Y281)
Phone-End (Y282)
Mode (Y283)
Audio head unit (D282)
Clock spring (S227)
SWS
C1354-18 SR,0.35D,2130 C0082L-4 C1254-5 Y,0.35,187 C2283-2
C1354-7 SB,0.35D,2130 C0082L-7 C1254-2 U,0.35,187 C2283-3
AV input panel (D346)
AUX L +
AUX R +
GND
A
Sheet1
RU,0.5D,1535 C1354-8
CONTROL
L
C2115-8 R,0.5D,1630 C1167L-20 C1165-20 R,0.5D,2900 C2754S-11 C2755-11 R,0.5D,455 C2831-4
R
C2115-7 U,0.5D,1630 C1167L-21 C1165-21 U,0.5D,2900 C2754S-10 C2755-10 U,0.5D,455 C2831-3
-VE
C2115-6 SCR,MQC,1570 C1167L-22 C1165-22 SCR,SCR,3100 C2754S-9 C2755-9 SCR,0.5D,530 C2831-2
B,1.5D,170 SJ301 B,0.5D,285 C2831-5
C2755-14 C2754S-14 B,1.5D,1630
C2566-1
TYPE 3
(NAV) C2115-2 +
(NAV) C2115-4 -
B,0.5D,135
C
Sheet3
(NAV) C2115-1 SCR GND C2115-12
B,0.5D,715 (ENHANCED NAVIGATION) SJ590L B,0.5D,2010
B,0.5D,2025 (AMP + AUU)
C2626L-1
TYPE 3
GND
C1354-1 B,1.5D,1095 SJ520L B,0.75D,100 C2640L-2 C2639-2 B,0.75D,120 SJ521 B,1.5D,4290 C2645-1
TYPE 3
SJ965 YU,0.35D,545 C1354-9
MS CAN H
B,0.75D,100 C2640L-3 C2639-3 B,0.75D,120
SJ975 YW,0.35D,545 C1354-10
MS CAN L
PU,0.75D,760
F
Sheet3
BATT
C1354-11 PU,0.75D,660
SJ131
PU,0.75D,3215 (RSE NO TELEPHONE) Sheet8 P
X
Sheet1
PU,1.5D,875
PU,0.75D,910 C0469L-5 C0467-5 PU,0.75D,1395 C0981-4 C0395-4
PU,0.75D,2805 (TELEPHONE NO RSE) Sheet7 L
PU,0.75D,2500 (TELEPHONE + RSE) Sheet7 K
SCR,MQD,940 SJ693 SCR,MQE,1800 Sheet3 MM
B,0.5D,275 SJ692 B,0.5D,575 Sheet3 LL
R,0.5D,325 SJ691 R,0.5D,525 Sheet3 KK
Lamp-Interior-Front (B100)
Microphone (F172)
(NAV) SCR,MQF,765 C0469L-3 C0467-3 SCR,SCR,2040 C0084-19 C0610-19 SCR,MQB,1195
B,0.5D,750 C0084-17 C0610-17 B,0.5D,1380 C1462-1 MIC -
(NAV) B,0.5D,1355 C1167L-13 C1165-13 R,0.5D,750 C0084-18 C0610-18 R,0.5D,1380 C1462-2 MIC +
(NAV) R,0.5D,1305 C1167L-14 C1165-14

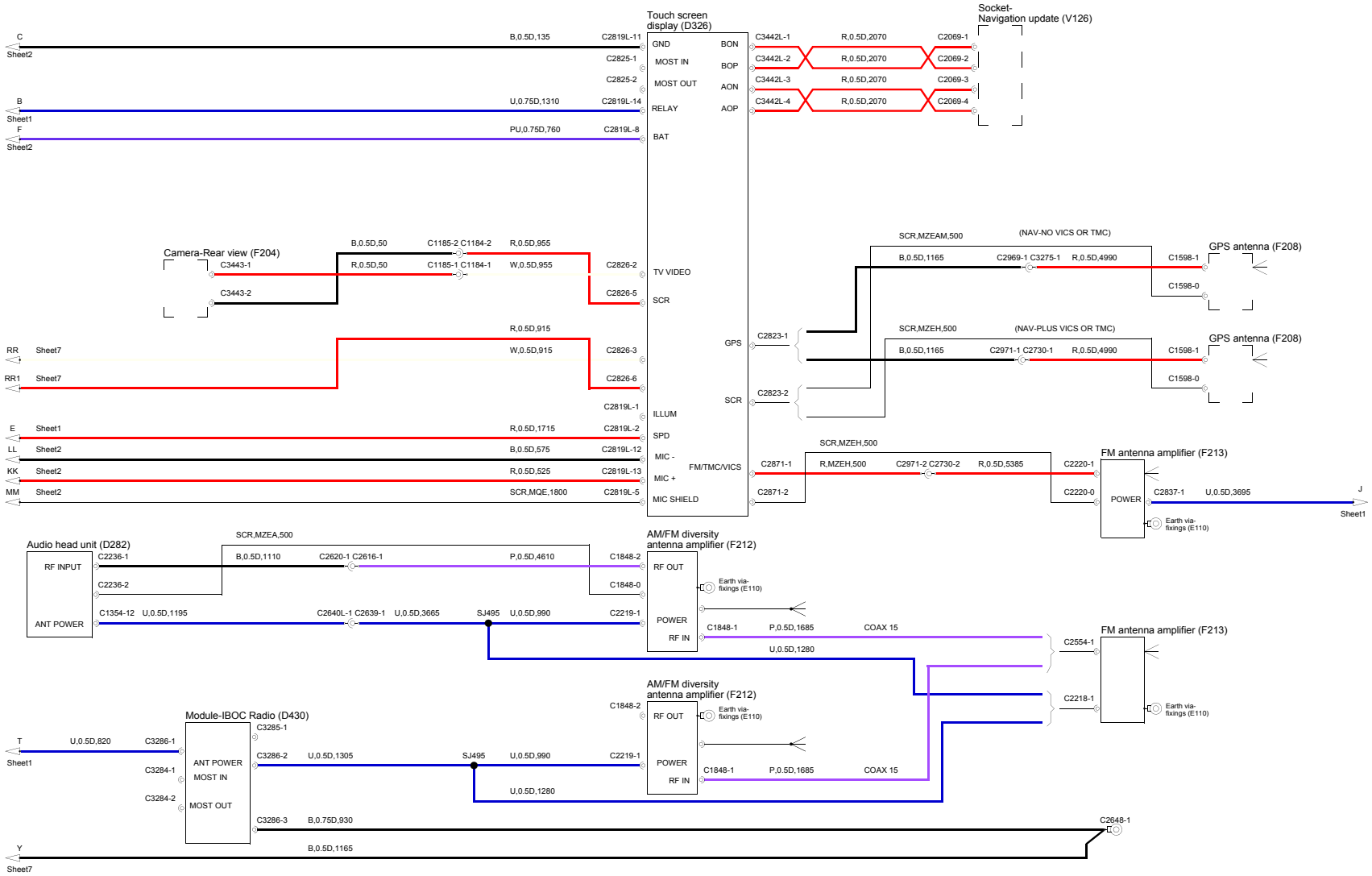
Touch screen display (D326)
Socket-Navigation update (V126)
C
Sheet2
B,0.5D,135
C2819L-11
GND
BON
C3442L-1
R,0.5D,2070
C2069-1
C2825-1
MOST IN
BOP
C3442L-2
R,0.5D,2070
C2069-2
C2825-2
MOST OUT
AON
C3442L-3
R,0.5D,2070
C2069-3
B
Sheet1
U,0.75D,1310
C2819L-14
RELAY
AOP
C3442L-4
R,0.5D,2070
C2069-4
F
Sheet2
PU,0.75D,760
C2819L-8
BAT
Camera-Rear view (F204)
B,0.5D,50
C1185-2 C1184-2
R,0.5D,955
C3443-1
R,0.5D,50
C1185-1 C1184-1
W,0.5D,955
C2826-2
TV VIDEO
C3443-2
C2826-5
SCR
SCR,MZEAM,500
(NAV-NO VICS OR TMC)
B,0.5D,1165
C2969-1 C3275-1
R,0.5D,4990
C1598-1
GPS antenna (F208)
C1598-0
R,0.5D,915
RR
Sheet7
W,0.5D,915
C2826-3
GPS
C2823-1
SCR,MZEH,500
(NAV-PLUS VICS OR TMC)
B,0.5D,1165
C2971-1 C2730-1
R,0.5D,4990
C1598-1
GPS antenna (F208)
C1598-0
RR1
Sheet7
C2826-6
C2823-2
SCR
C2819L-1
ILLUM
E
Sheet1
R,0.5D,1715
C2819L-2
SPD
LL
Sheet2
B,0.5D,575
C2819L-12
MIC -
SCR,MZEH,500
KK
Sheet2
R,0.5D,525
C2819L-13
MIC +
FM/TMC/VICS
C2871-1
R,MZEH,500
C2971-2 C2730-2
R,0.5D,5385
C2220-1
FM antenna amplifier (F213)
MM
Sheet2
SCR,MQE,1800
C2819L-5
MIC SHIELD
C2871-2
C2220-0
POWER
C2837-1
U,0.5D,3695
J
Sheet1
Earth via-fixings (E110)
Audio head unit (D282)
SCR,MZEA,500
RF INPUT
C2236-1
B,0.5D,1110
C2620-1 C2616-1
P,0.5D,4610
C1848-2
AM/FM diversity antenna amplifier (F212)
RF OUT
C2236-2
C1848-0
Earth via-fixings (E110)
ANT POWER
C1354-12
U,0.5D,1195
C2640L-1 C2639-1
U,0.5D,3665
SJ495
U,0.5D,990
C2219-1
POWER
C1848-1
P,0.5D,1685
COAX 15
RF IN
U,0.5D,1280
FM antenna amplifier (F213)
C2554-1
C2218-1
Earth via-fixings (E110)
AM/FM diversity antenna amplifier (F212)
C1848-2
RF OUT
Earth via-fixings (E110)
Module-IBOC Radio (D430)
C3285-1
T
Sheet1
U,0.5D,820
C3286-1
ANT POWER
C3286-2
U,0.5D,1305
SJ495
U,0.5D,990
C2219-1
C3284-1
MOST IN
POWER
C1848-1
P,0.5D,1685
COAX 15
C3284-2
MOST OUT
RF IN
U,0.5D,1280
C3286-3
B,0.75D,930
C2648-1
Y
Sheet7
B,0.5D,1165

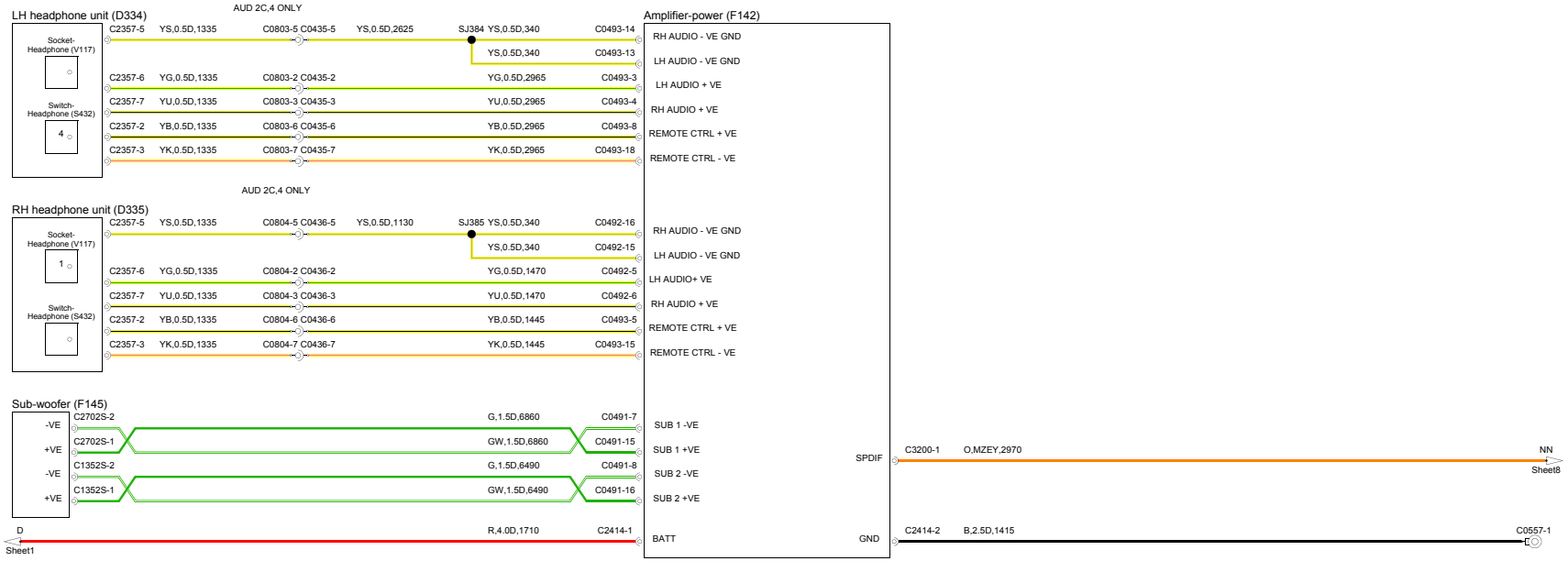
LH headphone unit (D334)
AUD 2C,4 ONLY
Amplifier-power (F142)
Socket-Headphone (V117)
Switch-Headphone (S432)
4
C2357-5 YS,0.5D,1335 C0803-5 C0435-5 YS,0.5D,2625 SJ384 YS,0.5D,340 C0493-14
RH AUDIO - VE GND
YS,0.5D,340 C0493-13
LH AUDIO - VE GND
C2357-6 YG,0.5D,1335 C0803-2 C0435-2 YG,0.5D,2965 C0493-3
LH AUDIO + VE
C2357-7 YU,0.5D,1335 C0803-3 C0435-3 YU,0.5D,2965 C0493-4
RH AUDIO + VE
C2357-2 YB,0.5D,1335 C0803-6 C0435-6 YB,0.5D,2965 C0493-8
REMOTE CTRL + VE
C2357-3 YK,0.5D,1335 C0803-7 C0435-7 YK,0.5D,2965 C0493-18
REMOTE CTRL - VE
AUD 2C,4 ONLY
RH headphone unit (D335)
Socket-Headphone (V117)
1
Switch-Headphone (S432)
C2357-5 YS,0.5D,1335 C0804-5 C0436-5 YS,0.5D,1130 SJ385 YS,0.5D,340 C0492-16
RH AUDIO - VE GND
YS,0.5D,340 C0492-15
LH AUDIO - VE GND
C2357-6 YG,0.5D,1335 C0804-2 C0436-2 YG,0.5D,1470 C0492-5
LH AUDIO+ VE
C2357-7 YU,0.5D,1335 C0804-3 C0436-3 YU,0.5D,1470 C0492-6
RH AUDIO + VE
C2357-2 YB,0.5D,1335 C0804-6 C0436-6 YB,0.5D,1445 C0493-5
REMOTE CTRL + VE
C2357-3 YK,0.5D,1335 C0804-7 C0436-7 YK,0.5D,1445 C0493-15
REMOTE CTRL - VE
Sub-woofer (F145)
-VE C2702S-2 G,1.5D,6860 C0491-7
SUB 1 -VE
+VE C2702S-1 GW,1.5D,6860 C0491-15
SUB 1 +VE
-VE C1352S-2 G,1.5D,6490 C0491-8
SUB 2 -VE
+VE C1352S-1 GW,1.5D,6490 C0491-16
SUB 2 +VE
SPDIF C3200-1 O,MZEY,2970 NN
Sheet8
D R,4.0D,1710 C2414-1
Sheet1
BATT
GND C2414-2 B,2.5D,1415 C0557-1

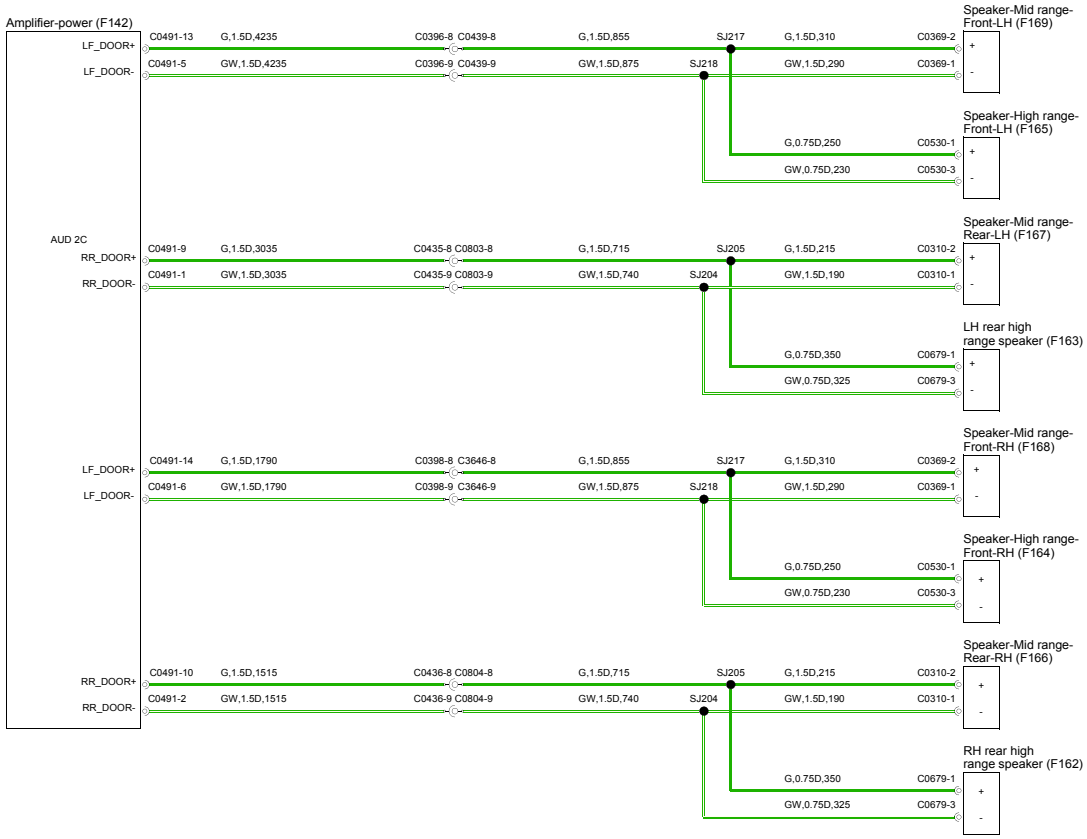
Amplifier-power (F142)
AUD 2C
LF_DOOR+
LF_DOOR-
RR_DOOR+
RR_DOOR-
C0491-13 G,1.5D,4235 C0396-8 C0439-8 G,1.5D,855 SJ217 G,1.5D,310 C0369-2
C0491-5 GW,1.5D,4235 C0396-9 C0439-9 GW,1.5D,875 SJ218 GW,1.5D,290 C0369-1
Speaker-Mid range-Front-LH (F169)
G,0.75D,250 C0530-1
GW,0.75D,230 C0530-3
Speaker-High range-Front-LH (F165)
C0491-9 G,1.5D,3035 C0435-8 C0803-8 G,1.5D,715 SJ205 G,1.5D,215 C0310-2
C0491-1 GW,1.5D,3035 C0435-9 C0803-9 GW,1.5D,740 SJ204 GW,1.5D,190 C0310-1
Speaker-Mid range-Rear-LH (F167)
G,0.75D,350 C0679-1
GW,0.75D,325 C0679-3
LH rear high range speaker (F163)
C0491-14 G,1.5D,1790 C0398-8 C3646-8 G,1.5D,855 SJ217 G,1.5D,310 C0369-2
C0491-6 GW,1.5D,1790 C0398-9 C3646-9 GW,1.5D,875 SJ218 GW,1.5D,290 C0369-1
Speaker-Mid range-Front-RH (F168)
G,0.75D,250 C0530-1
GW,0.75D,230 C0530-3
Speaker-High range-Front-RH (F164)
C0491-10 G,1.5D,1515 C0436-8 C0804-8 G,1.5D,715 SJ205 G,1.5D,215 C0310-2
C0491-2 GW,1.5D,1515 C0436-9 C0804-9 GW,1.5D,740 SJ204 GW,1.5D,190 C0310-1
Speaker-Mid range-Rear-RH (F166)
G,0.75D,350 C0679-1
GW,0.75D,325 C0679-3
RH rear high range speaker (F162)
+
-

Speaker-Mid range-Front-LH (F169)
C0369-2 G,1.5D,310 SJ217 G,1.5D,855 C0439-8 C0396-8 G,1.5D,3970
C0369-1 GW,1.5D,290 SJ218 GW,1.5D,875 C0439-9 C0396-9 GW,1.5D,3935
Speaker-High range-Front-LH (F165)
C0530-3 GW,0.75D,230
C0530-1 G,0.75D,250
SJ41 G,0.75D,220 C0492-11
SJ42 GW,0.75D,255 C0492-1
Speaker-Low range-Front door-LH (F134)
C0688-1 GW,1.5D,960 C0439-22 C0396-22 GW,1.5D,4235 C0491-3
C0688-2 G,1.5D,960 C0439-21 C0396-21 G,1.5D,4235 C0491-11
Speaker-Mid range-Rear-LH (F167)
C0310-1 GW,1.5D,190 SJ204 GW,1.5D,740 C0803-9 C0435-9 GW,1.5D,3035 C0491-1
C0310-2 G,1.5D,215 SJ205 G,1.5D,715 C0803-8 C0435-8 G,1.5D,3035 C0491-9
LH rear high range speaker (F163)
C0679-1 G,0.75D,350
C0679-3 GW,0.75D,325
LH rear surround sound speaker (F198)
C0311S-2 G,0.75D,5745 C0491-13
C0311S-1 GW,0.75D,5745 C0491-5
Center speaker (F187)
C0369L-2 G,1.5D,1415 C0469L-11 C0467-11 G,1.5D,1515
C0369L-1 GW,1.5D,1415 C0469L-12 C0467-12
SJ37 G,0.75D,180 C0492-13
GW,1.5D,1440 SJ34 GW,0.75D,255 C0492-3
Amplifier-power (F142)
AUD 4
RF_MH-
RF_MH+
LF_MH+
LF_MH-
LF_BASS-
LF_BASS+
RF_BASS+
RF_BASS-
RR_DOOR-
RR_DOOR+
RS-
RS+
RR_DOOR-
RR_DOOR+
LS+
LS-
CENTRE +
CENTRE -
C0492-2 GW,0.75D,180 SJ43 GW,1.5D,1565 C0398-9 C3646-9 GW,1.5D,875 SJ218 GW,1.5D,290 C0369-1
C0492-12 G,0.75D,220 SJ35 G,1.5D,1525 C0398-8 C3646-8 G,1.5D,855 SJ217 G,1.5D,310 C0369-2
Speaker-Mid range-Front-RH (F168)
G,0.75D,250 C0530-1
GW,0.75D,230 C0530-3
Speaker-High range-Front-RH (F164)
C0491-12 G,1.5D,1790 C0398-21 C3646-21 G,1.5D,1065 C0688-2
C0491-4 GW,1.5D,1790 C0398-22 C3646-22 GW,1.5D,1065 C0688-1
Speaker-Low range-Front door-RH (F135)
C0491-6 GW,0.75D,3745 C0309S-1
C0491-14 G,0.75D,3745 C0309S-2
RH rear surround sound speaker (F199)
C0491-2 GW,1.5D,1515 C0436-9 C0804-9 GW,1.5D,740 SJ204 GW,1.5D,190 C0310-1
C0491-10 G,1.5D,1515 C0436-8 C0804-8 G,1.5D,715 SJ205 G,1.5D,215 C0310-2
Speaker-Mid range-Rear-RH (F166)
G,0.75D,350 C0679-1
GW,0.75D,325 C0679-3
RH rear high range speaker (F162)

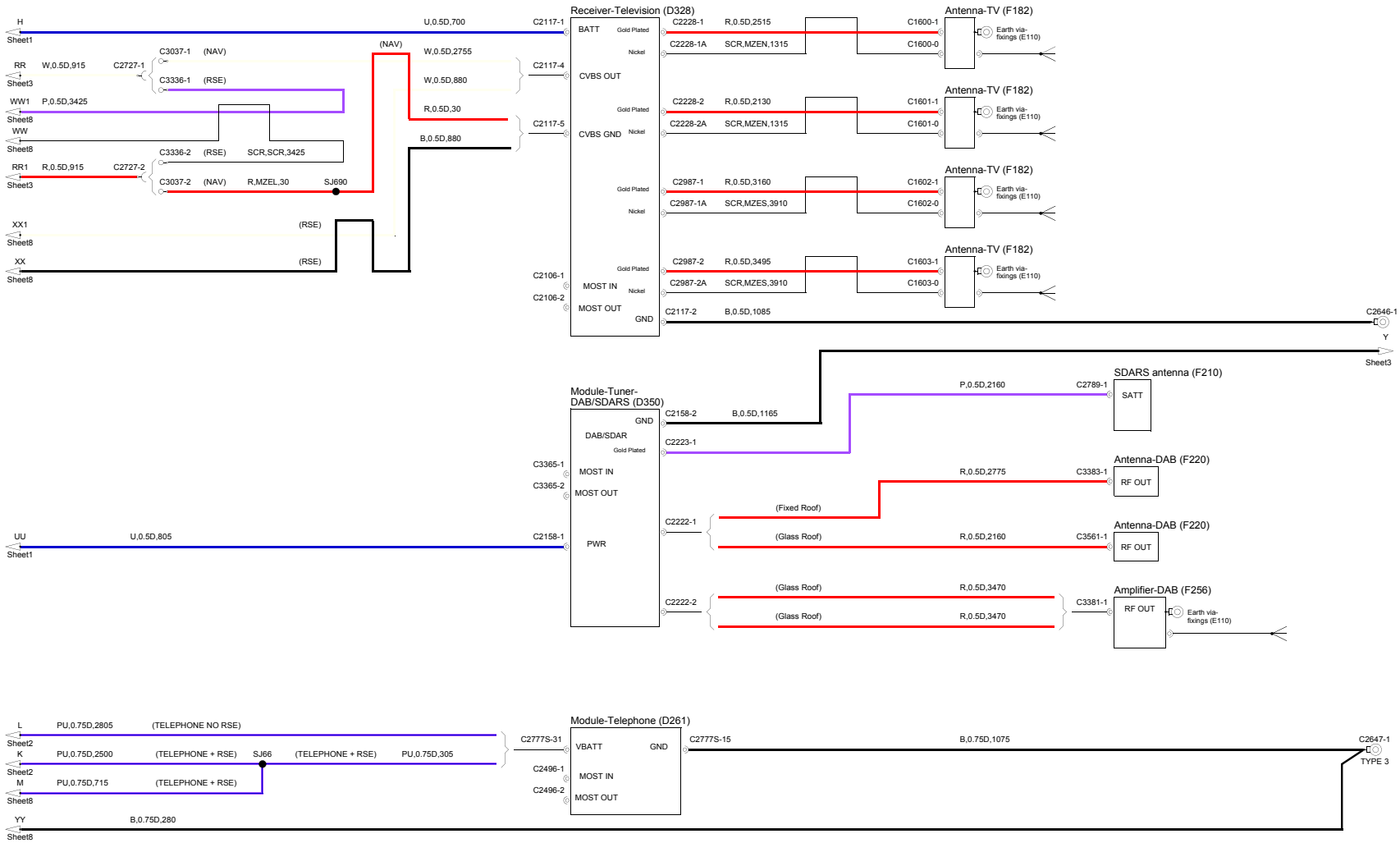
Receiver-Television (D328)
Antenna-TV (F182)
Module-Tuner-DAB/SDARS (D350)
SDARS antenna (F210)
Antenna-DAB (F220)
Amplifier-DAB (F256)
Module-Telephone (D261)
BATT
CVBS OUT
CVBS GND
MOST IN
MOST OUT
GND
DAB/SDAR
PWR
SATT
RF OUT
Earth via-fixings (E110)
H
Sheet1
RR
Sheet3
WW1
Sheet8
WW
RR1
XX1
XX
UU
L
K
M
YY
U,0.5D,700
W,0.5D,2755
W,0.5D,880
R,0.5D,30
B,0.5D,880
B,0.5D,1085
B,0.5D,1165
R,0.5D,2160
R,0.5D,2775
R,0.5D,3470
B,0.75D,1075
B,0.75D,280
U,0.5D,805
PU,0.75D,2805
PU,0.75D,2500
PU,0.75D,715
PU,0.75D,305
(TELEPHONE NO RSE)
(TELEPHONE + RSE)
(NAV)
(RSE)
(Fixed Roof)
(Glass Roof)
SJ690
SJ66
TYPE 3

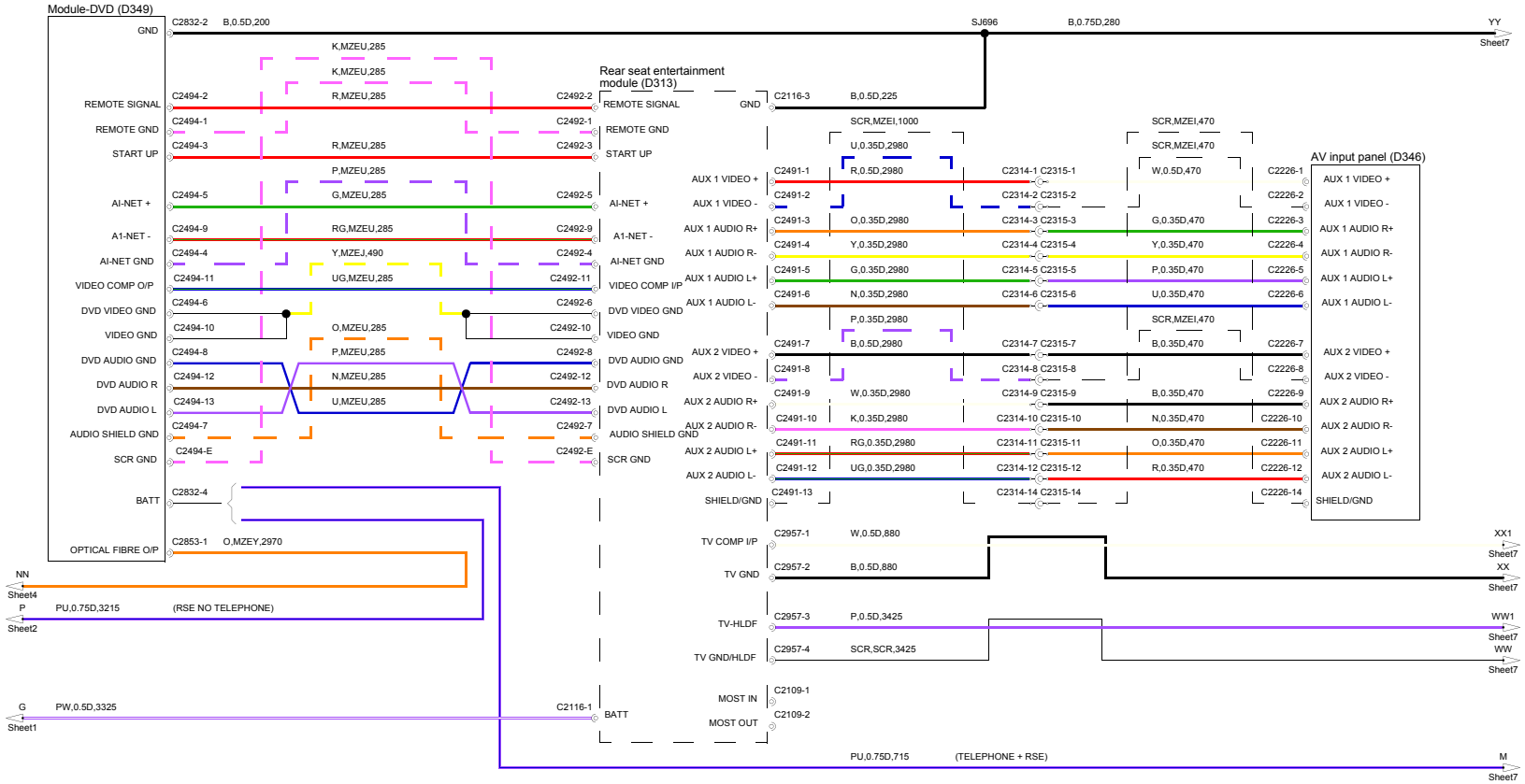
Module-DVD (D349)
GND
REMOTE SIGNAL
REMOTE GND
START UP
AI-NET +
A1-NET -
AI-NET GND
VIDEO COMP O/P
DVD VIDEO GND
VIDEO GND
DVD AUDIO GND
DVD AUDIO R
DVD AUDIO L
AUDIO SHIELD GND
SCR GND
BATT
OPTICAL FIBRE O/P
C2832-2 B,0.5D,200
SJ696 B,0.75D,280
YY
Sheet7
K,MZEU,285
K,MZEU,285
C2494-2 R,MZEU,285 C2492-2
C2494-1 C2492-1
C2494-3 R,MZEU,285 C2492-3
P,MZEU,285
C2494-5 G,MZEU,285 C2492-5
C2494-9 RG,MZEU,285 C2492-9
C2494-4 Y,MZEJ,490 C2492-4
C2494-11 UG,MZEU,285 C2492-11
C2494-6 C2492-6
C2494-10 O,MZEU,285 C2492-10
C2494-8 P,MZEU,285 C2492-8
C2494-12 N,MZEU,285 C2492-12
C2494-13 U,MZEU,285 C2492-13
C2494-7 C2492-7
C2494-E C2492-E
C2832-4
C2853-1 O,MZEY,2970
NN
Sheet4
P PU,0.75D,3215 (RSE NO TELEPHONE)
Sheet2
G PW,0.5D,3325 C2116-1
Sheet1
Rear seat entertainment module (D313)
REMOTE SIGNAL
REMOTE GND
START UP
AI-NET +
A1-NET -
AI-NET GND
VIDEO COMP I/P
DVD VIDEO GND
VIDEO GND
DVD AUDIO GND
DVD AUDIO R
DVD AUDIO L
AUDIO SHIELD GND
SCR GND
BATT
GND C2116-3 B,0.5D,225
SCR,MZEI,1000
U,0.35D,2980
SCR,MZEI,470
SCR,MZEI,470
AUX 1 VIDEO + C2491-1 R,0.5D,2980 C2314-1 C2315-1 W,0.5D,470 C2226-1 AUX 1 VIDEO +
AUX 1 VIDEO - C2491-2 C2314-2 C2315-2 C2226-2 AUX 1 VIDEO -
AUX 1 AUDIO R+ C2491-3 O,0.35D,2980 C2314-3 C2315-3 G,0.35D,470 C2226-3 AUX 1 AUDIO R+
AUX 1 AUDIO R- C2491-4 Y,0.35D,2980 C2314-4 C2315-4 Y,0.35D,470 C2226-4 AUX 1 AUDIO R-
AUX 1 AUDIO L+ C2491-5 G,0.35D,2980 C2314-5 C2315-5 P,0.35D,470 C2226-5 AUX 1 AUDIO L+
AUX 1 AUDIO L- C2491-6 N,0.35D,2980 C2314-6 C2315-6 U,0.35D,470 C2226-6 AUX 1 AUDIO L-
P,0.35D,2980
SCR,MZEI,470
AUX 2 VIDEO + C2491-7 B,0.5D,2980 C2314-7 C2315-7 B,0.35D,470 C2226-7 AUX 2 VIDEO +
AUX 2 VIDEO - C2491-8 C2314-8 C2315-8 C2226-8 AUX 2 VIDEO -
AUX 2 AUDIO R+ C2491-9 W,0.35D,2980 C2314-9 C2315-9 B,0.35D,470 C2226-9 AUX 2 AUDIO R+
AUX 2 AUDIO R- C2491-10 K,0.35D,2980 C2314-10 C2315-10 N,0.35D,470 C2226-10 AUX 2 AUDIO R-
AUX 2 AUDIO L+ C2491-11 RG,0.35D,2980 C2314-11 C2315-11 O,0.35D,470 C2226-11 AUX 2 AUDIO L+
AUX 2 AUDIO L- C2491-12 UG,0.35D,2980 C2314-12 C2315-12 R,0.35D,470 C2226-12 AUX 2 AUDIO L-
SHIELD/GND C2491-13 C2314-14 C2315-14 C2226-14 SHIELD/GND
AV input panel (D346)
TV COMP I/P C2957-1 W,0.5D,880 XX1 Sheet7
TV GND C2957-2 B,0.5D,880 XX Sheet7
TV-HLDF C2957-3 P,0.5D,3425 WW1 Sheet7
TV GND/HLDF C2957-4 SCR,SCR,3425 WW Sheet7
MOST IN C2109-1
MOST OUT C2109-2
PU,0.75D,715 (TELEPHONE + RSE) M Sheet7

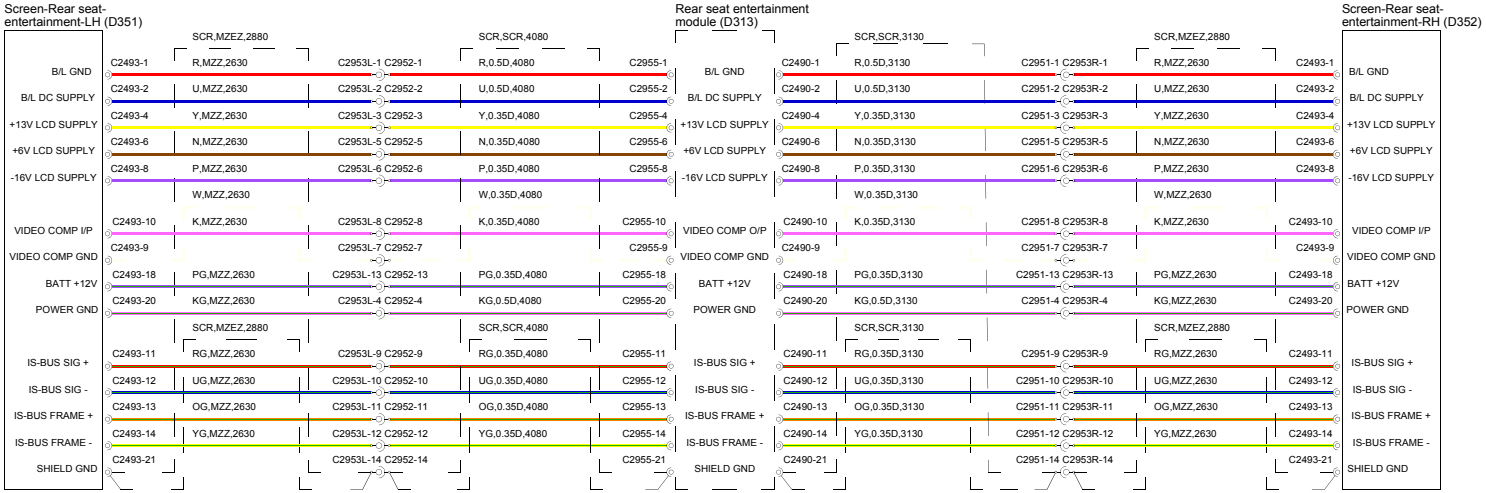
Screen-Rear seat-entertainment-LH (D351)
Rear seat entertainment module (D313)
Screen-Rear seat-entertainment-RH (D352)
B/L GND
B/L DC SUPPLY
+13V LCD SUPPLY
+6V LCD SUPPLY
-16V LCD SUPPLY
VIDEO COMP I/P
VIDEO COMP GND
BATT +12V
POWER GND
IS-BUS SIG +
IS-BUS SIG -
IS-BUS FRAME +
IS-BUS FRAME -
SHIELD GND
VIDEO COMP O/P
C2493-1 R,MZZ,2630 C2953L-1 C2952-1 R,0.5D,4080 C2955-1
C2493-2 U,MZZ,2630 C2953L-2 C2952-2 U,0.5D,4080 C2955-2
C2493-4 Y,MZZ,2630 C2953L-3 C2952-3 Y,0.35D,4080 C2955-4
C2493-6 N,MZZ,2630 C2953L-5 C2952-5 N,0.35D,4080 C2955-6
C2493-8 P,MZZ,2630 C2953L-6 C2952-6 P,0.35D,4080 C2955-8
W,MZZ,2630 W,0.35D,4080
C2493-10 K,MZZ,2630 C2953L-8 C2952-8 K,0.35D,4080 C2955-10
C2493-9 C2953L-7 C2952-7 C2955-9
C2493-18 PG,MZZ,2630 C2953L-13 C2952-13 PG,0.35D,4080 C2955-18
C2493-20 KG,MZZ,2630 C2953L-4 C2952-4 KG,0.5D,4080 C2955-20
C2493-11 RG,MZZ,2630 C2953L-9 C2952-9 RG,0.35D,4080 C2955-11
C2493-12 UG,MZZ,2630 C2953L-10 C2952-10 UG,0.35D,4080 C2955-12
C2493-13 OG,MZZ,2630 C2953L-11 C2952-11 OG,0.35D,4080 C2955-13
C2493-14 YG,MZZ,2630 C2953L-12 C2952-12 YG,0.35D,4080 C2955-14
C2493-21 C2953L-14 C2952-14 C2955-21
SCR,MZEZ,2880
SCR,SCR,4080
C2490-1 R,0.5D,3130 C2951-1 C2953R-1 R,MZZ,2630 C2493-1
C2490-2 U,0.5D,3130 C2951-2 C2953R-2 U,MZZ,2630 C2493-2
C2490-4 Y,0.35D,3130 C2951-3 C2953R-3 Y,MZZ,2630 C2493-4
C2490-6 N,0.35D,3130 C2951-5 C2953R-5 N,MZZ,2630 C2493-6
C2490-8 P,0.35D,3130 C2951-6 C2953R-6 P,MZZ,2630 C2493-8
W,0.35D,3130 W,MZZ,2630
C2490-10 K,0.35D,3130 C2951-8 C2953R-8 K,MZZ,2630 C2493-10
C2490-9 C2951-7 C2953R-7 C2493-9
C2490-18 PG,0.35D,3130 C2951-13 C2953R-13 PG,MZZ,2630 C2493-18
C2490-20 KG,0.5D,3130 C2951-4 C2953R-4 KG,MZZ,2630 C2493-20
C2490-11 RG,0.35D,3130 C2951-9 C2953R-9 RG,MZZ,2630 C2493-11
C2490-12 UG,0.35D,3130 C2951-10 C2953R-10 UG,MZZ,2630 C2493-12
C2490-13 OG,0.35D,3130 C2951-11 C2953R-11 OG,MZZ,2630 C2493-13
C2490-14 YG,0.35D,3130 C2951-12 C2953R-12 YG,MZZ,2630 C2493-14
C2490-21 C2951-14 C2953R-14 C2493-21
SCR,SCR,3130
SCR,MZEZ,2880

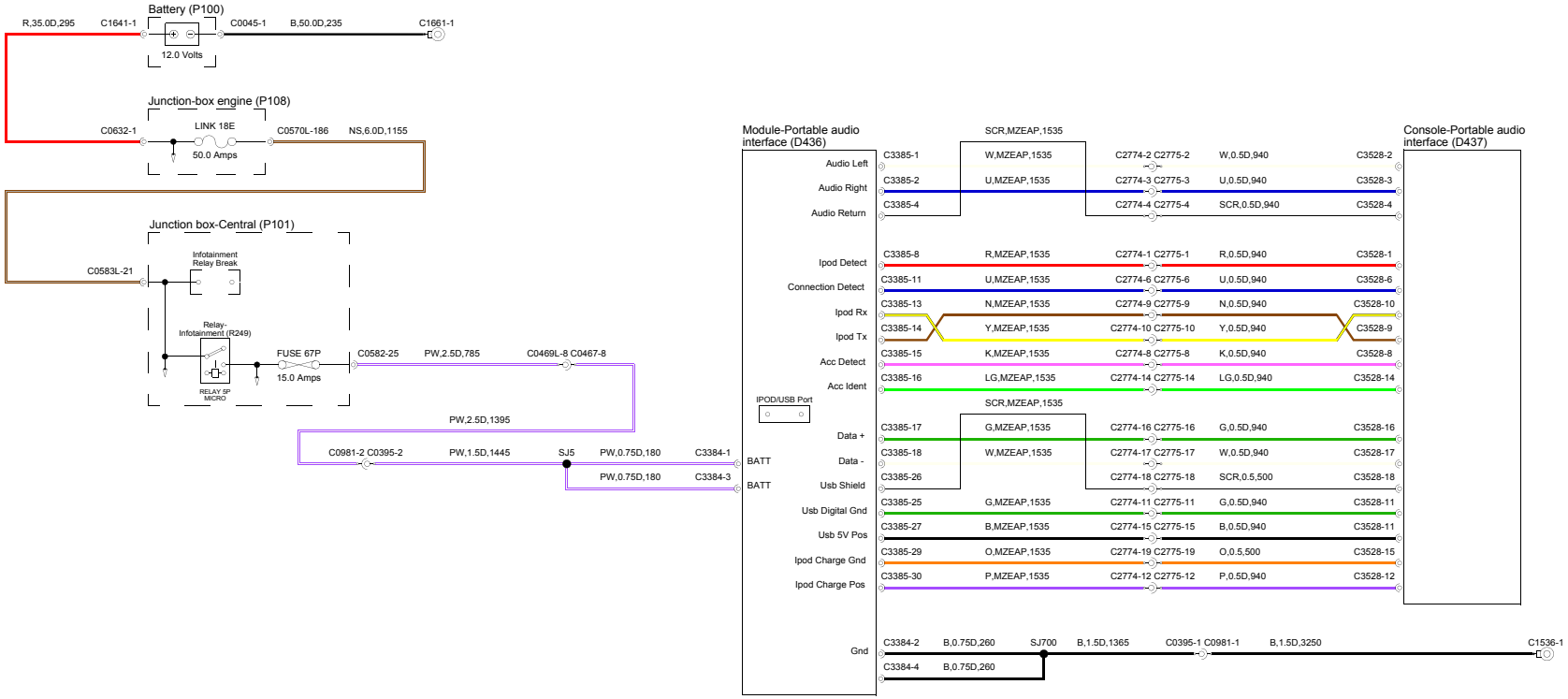
Battery (P100)
R,35.0D,295
C1641-1
C0045-1
B,50.0D,235
C1661-1
12.0 Volts
Junction-box engine (P108)
C0632-1
LINK 18E
50.0 Amps
C0570L-186
NS,6.0D,1155
Junction box-Central (P101)
C0583L-21
Infotainment Relay Break
Relay-Infotainment (R249)
RELAY SP MICRO
FUSE 67P
15.0 Amps
C0582-25
PW,2.5D,785
C0469L-8 C0467-8
PW,2.5D,1395
C0981-2 C0395-2
PW,1.5D,1445
SJ5
PW,0.75D,180
C3384-1
PW,0.75D,180
C3384-3
Module-Portable audio interface (D436)
Console-Portable audio interface (D437)
IPOD/USB Port
BATT
BATT
Audio Left
Audio Right
Audio Return
Ipod Detect
Connection Detect
Ipod Rx
Ipod Tx
Acc Detect
Acc Ident
Data +
Data -
Usb Shield
Usb Digital Gnd
Usb 5V Pos
Ipod Charge Gnd
Ipod Charge Pos
Gnd
C3385-1 W,MZEAP,1535 C2774-2 C2775-2 W,0.5D,940 C3528-2
C3385-2 U,MZEAP,1535 C2774-3 C2775-3 U,0.5D,940 C3528-3
C3385-4 SCR,MZEAP,1535 C2774-4 C2775-4 SCR,0.5D,940 C3528-4
C3385-8 R,MZEAP,1535 C2774-1 C2775-1 R,0.5D,940 C3528-1
C3385-11 U,MZEAP,1535 C2774-6 C2775-6 U,0.5D,940 C3528-6
C3385-13 N,MZEAP,1535 C2774-9 C2775-9 N,0.5D,940 C3528-10
C3385-14 Y,MZEAP,1535 C2774-10 C2775-10 Y,0.5D,940 C3528-9
C3385-15 K,MZEAP,1535 C2774-8 C2775-8 K,0.5D,940 C3528-8
C3385-16 LG,MZEAP,1535 C2774-14 C2775-14 LG,0.5D,940 C3528-14
C3385-17 G,MZEAP,1535 C2774-16 C2775-16 G,0.5D,940 C3528-16
C3385-18 W,MZEAP,1535 C2774-17 C2775-17 W,0.5D,940 C3528-17
C3385-26 SCR,MZEAP,1535 C2774-18 C2775-18 SCR,0.5,500 C3528-18
C3385-25 G,MZEAP,1535 C2774-11 C2775-11 G,0.5D,940 C3528-11
C3385-27 B,MZEAP,1535 C2774-15 C2775-15 B,0.5D,940 C3528-11
C3385-29 O,MZEAP,1535 C2774-19 C2775-19 O,0.5,500 C3528-15
C3385-30 P,MZEAP,1535 C2774-12 C2775-12 P,0.5D,940 C3528-12
C3384-2 B,0.75D,260 SJ700 B,1.5D,1365 C0395-1 C0981-1 B,1.5D,3250 C1536-1
C3384-4 B,0.75D,260